Sistema **NEM 150**
*System **NEM 150***

Sistema d’apertura a traslazione per vetri piani e curvi lineari temprati

Swing-out opening system for tempered flat and curve linear glass panels

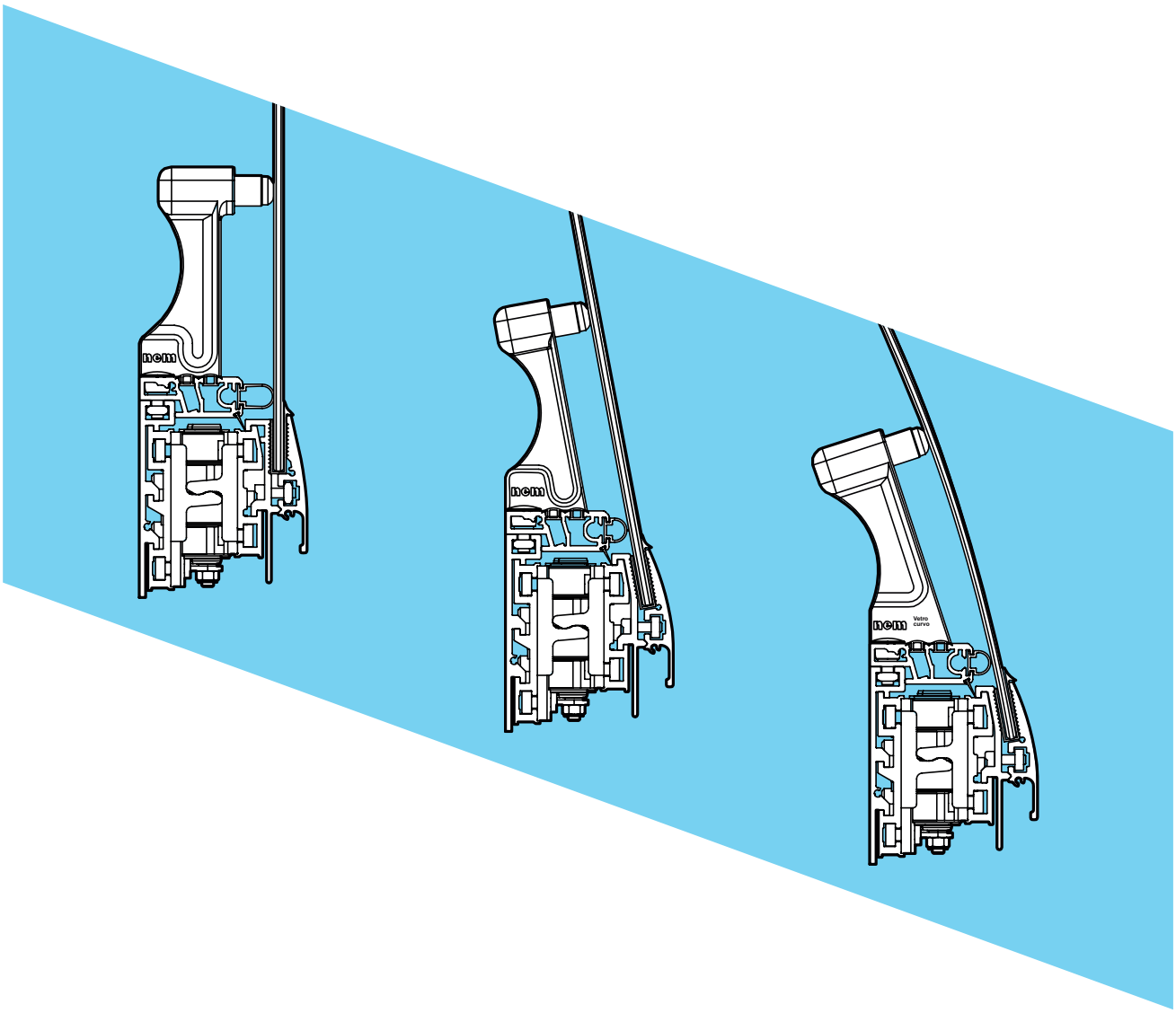

15/09/25

Nem srl - via degli Artigiani 9 - 34070 San Pier d'Isonzo (GO) - ITALY - tel. +39 0481 70297 - nem@nemsrl.it - www.nemsrl.it

All rights reserved. Any unauthorized copying, reproduction and lending is strictly prohibited.

Sistema **NEM 150**
Introduzione generale / *General introduction*

The system **NEM 150** is a swing-out opening system for the front glass of cabinets and refrigerated display cases. This solution is available for **6mm** front glass thickness and also for **18mm** double glass (system NEM 151).

Compared to the classic lift-up and tilt-down glass opening solutions, the swing-out opening NEM 150 is much safer, as the glass is not lifted and suspended above the head of the operator, and allows to optimize the counter management time, as the front access to the counter inner side is much more convenient, for both goods front loading and ordinary cleaning.

The system NEM 150 has been developed and improved over the years to be modular, and easily adaptable to the variable counter dimensions, as the longitudinal profiles do not require any special processing, beyond cutting and fixing hole drilling. The opening device is supplied complete and ready to be installed. Furthermore, all the opening devices NEM 150 are compatible with both glass options available. Thanks to this feature, a wide variety of cabinet designs can be achieved with just one opening system, **NEM 150**.

Beyond all the technical advantages, system NEM 150 optimizes also visibility of exposed products, as all the opening hardware is hidden in the base, and has no visible impact on the goods.

Application and design examples

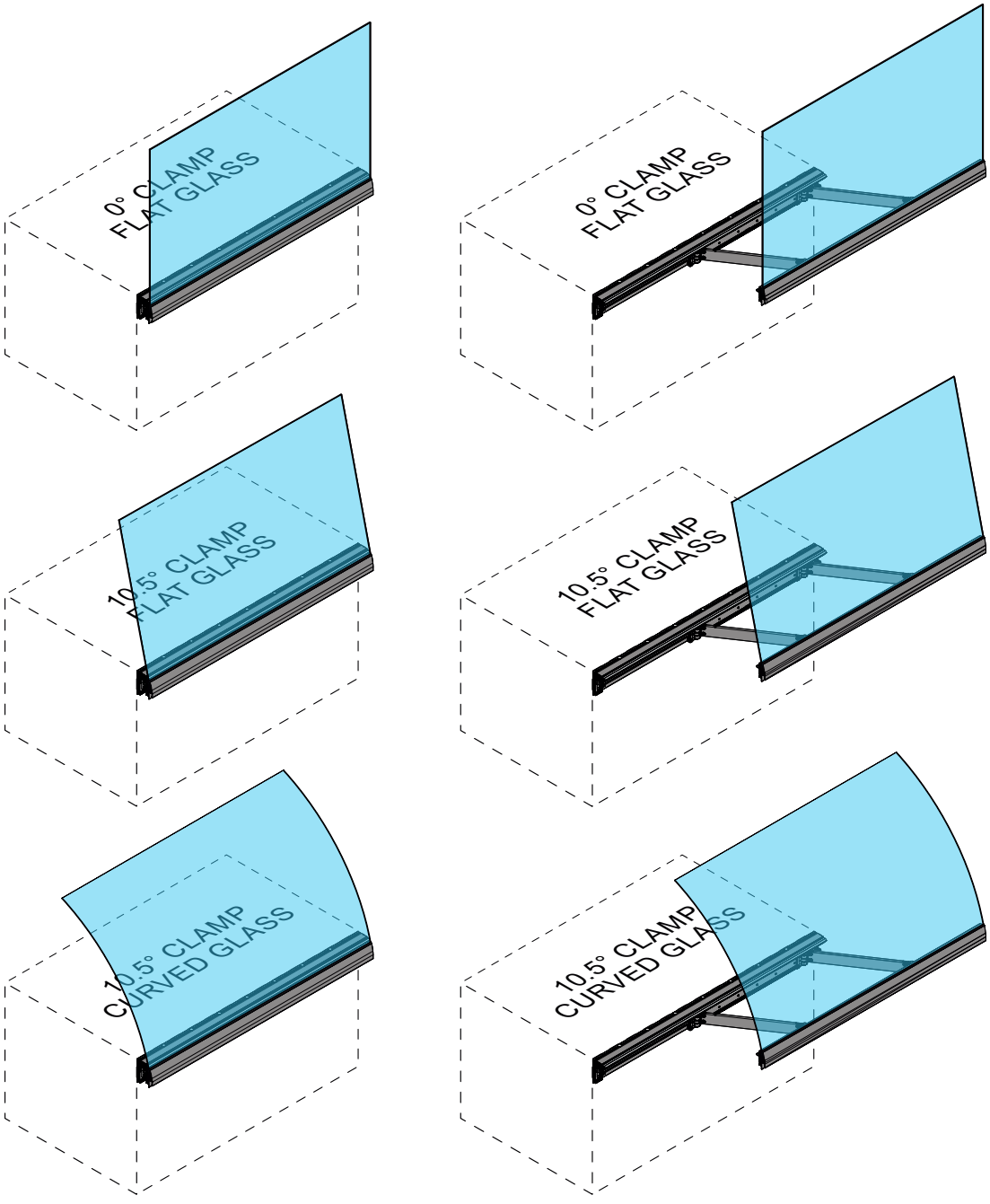

Sistema **NEM 150**

Meccaniche di apertura universali / *Universal opening devices*

The standard opening devices **NEM 150** have been developed to be universal; therefore the same item number can be used for the front glass opening to the left, or to the right side. To set the hardware opening direction, you need only to change the end of stroke position.

Furthermore, all the opening devices NEM 150 are compatible with both glass clamp options. Thanks to this feature, a wide variety of cabinet designs can be achieved with just one hardware.

The standard opening devices are supplied complete of all the fixing smallware and 1 alignment / blocking kit.

NEM 150

Meccaniche di apertura standard / Standard opening devices

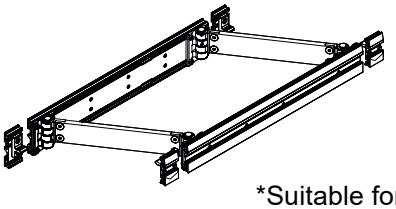

Meccanica di apertura compl. 900/1014mm* **Cod. 150.3100**
*Compl. opening device 900/1014mm**

*Suitable for glass clamp length between 900 and 1014mm; estimated opening width 545mm

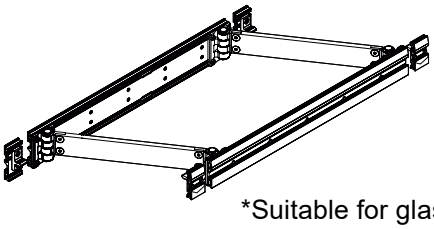

Meccanica di apertura compl. 1015/1214mm* **Cod. 150.3200**
*Compl. opening device 1015/1214mm**

*Suitable for glass clamp length between 1015 and 1214mm; estimated opening width 635mm

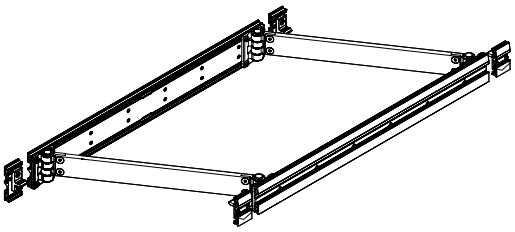

Meccanica di apertura compl. 1215/1414mm* **Cod. 150.3300**
*Compl. opening device 1215/1414mm**

*Suitable for glass clamp length between 1215 and 1414mm; estimated opening width 820mm

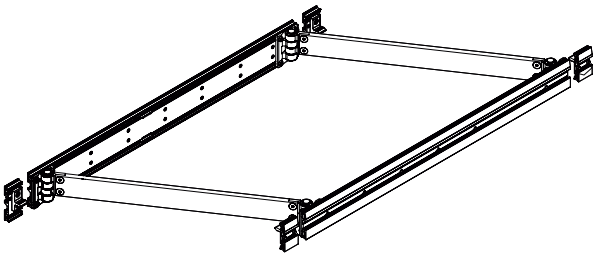

Meccanica di apertura compl. 1415/1560mm* **Cod. 150.3400**
*Compl. opening device 1415/1560mm**

*Suitable for glass clamp length between 1415 and 1560mm; estimated opening width 1000mm

Indicazioni scelta meccaniche / Device choice suggestion

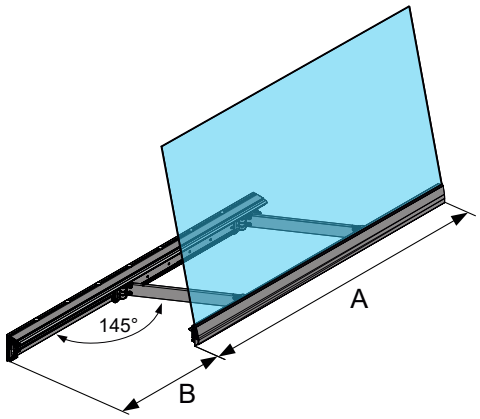

A	**B**	
Lunghezza pinza vetro ***Glass clamp length***	**Apertura** ***Opening***	**Meccanica d'apertura** ***Opening device***
900mm → 1014mm 35 $^{7}/_{16}$in → 39 $^{7}/_{8}$in	~ 545mm ~ 21 $^{1}/_{2}$in	**Cod. 150.3100.00**
1015mm → 1214mm 39 $^{15}/_{16}$in → 47 $^{13}/_{16}$in	~ 635mm ~ 25in	**Cod. 150.3200.00**
1215mm → 1414mm 47 $^{7}/_{8}$in → 55 $^{5}/_{8}$in	~ 820mm ~ 32 $^{1}/_{4}$in	**Cod. 150.3300.00**
1415mm → 1560mm 55 $^{3}/_{4}$in → 61 $^{3}/_{8}$in	~ 1000mm ~ 39 $^{3}/_{8}$in	**Cod. 150.3400.00**

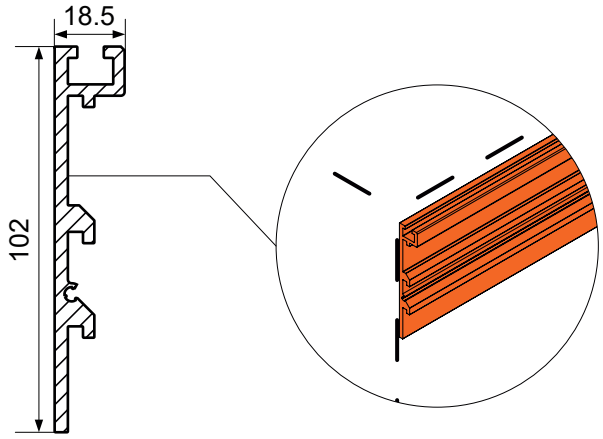

Profilo base portante **L=5000mm Cod. 150.7210**
Load bearing base profile **L=2500mm Cod. 150.7215**

*Attention, items **150.7210** and **150.7215** are supplied without fixing holes and d*o not include fixing screws; please see pag. 5

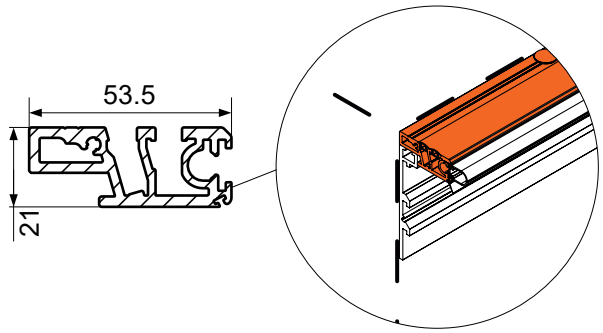

Profilo carter superiore **L=5000mm Cod. 150.7750**
Top cover profile **L=2500mm Cod. 150.7755**

*Attention, items **150.7750** and **150.7755** are supplied without fixing holes, and d*o not include gaskets, and fixing screws kit; please see pag. 5

***0° clamp** assembly for flat vertical glass panels*

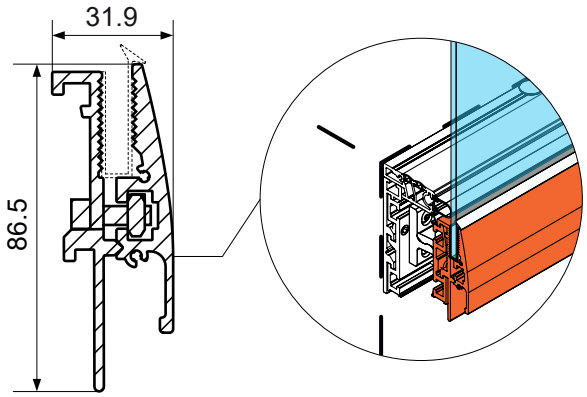

Assieme pinza vetro 0° **L=5000mm Cod. 150.8050**
0° glass clamp assembly **L=2500mm Cod. 150.8055**

*cod. **150.8050** and **150.8055** includes:*
- Glass clamp fastening bolts and squared nuts
- Front and rear glass clamp profiles
- Clamp fixing screws are already included in the opening devices.

Do not include glass clamp gasket, please see pag. 5

***10.5° clamp** assembly for flat inclined and curved R1016 glass panels*

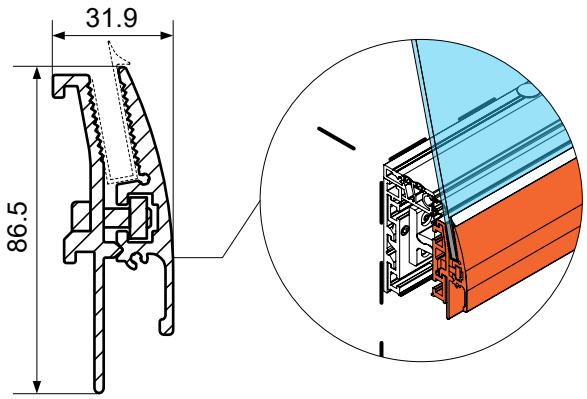

Assieme pinza vetro 10.5° **L=5000mm Cod. 150.7650**
10.5° glass clamp assembly **L=2500mm Cod. 150.7655**

*cod. **150.7650** and **150.7655** includes:*
- Glass clamp fastening bolts and squared nuts
- Front and rear glass clamp profiles
- Clamp fixing screws are already included in the opening devices.

Do not include glass clamp gasket, please see pag. 5

Sistema **NEM 150**

Guarnizioni e componenti standard */ Gaskets and standard components*

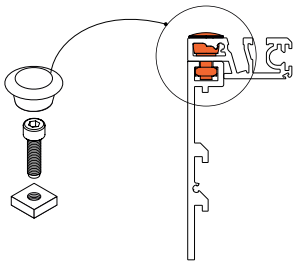

Kit di fissaggio prof. carter - M5 **100pcs/box** **Cod. 001.1502.00**
Top cover profile fixing kit - M5

Cod. ***001.1502.00*** *includes:*

- Tappo D10mm / *End cap D10mm* - **Cod. 006.1121.00**
- Vite TCEI M5x12 / *SHC Screw M5x12* - **Cod. 002.0139.00**
- Dado quadro M5 / *Square nut M5* - **Cod. 002.2008.00**

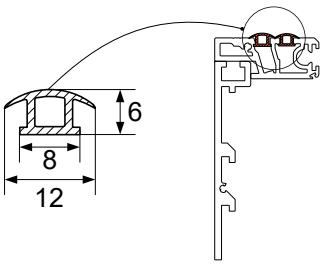

Guarnizione di chiusura carter **L=100m** **Cod. 090.1199.00**
Carter gap closing gasket

Materiale/*Material* **PVC - 63 Shore**
Colore/*Colour* **Neutro/Neutral**

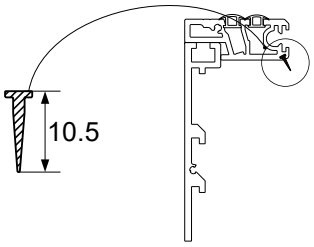

Guarnizione di chiusura siliconica **L=100m** **Cod. 550.0099.00**
Gap closing silicon gasket

Materiale/*Material* **silicon - 70 Shore**
Colore/*Colour* **neutro/*neutral***

*End of stroke gasket for **0° clamp option***

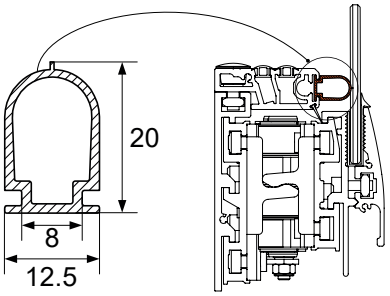

Guarn. battuta vetro - pinza 0° **L=100m** **Cod. 150.0399.00**
Glass stroke gasket - clamp 0°

Materiale/*Material* **silicon - 70 Shore**
Colore/*Colour* **Neutro/Neutral**

*End of stroke gasket for **10.5° clamp option***

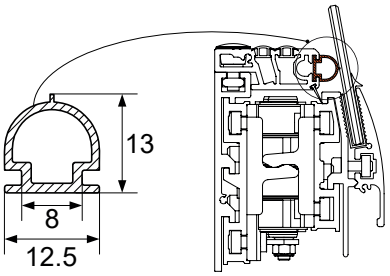

Guarn. battuta vetro - pinza 10.5° **L=100m** **Cod. 150.0199.00**
Glass stroke gasket - clamp 10.5°

Materiale/*Material* **silicon - 70 Shore**
Colore/*Colour* **Neutro/Neutral**

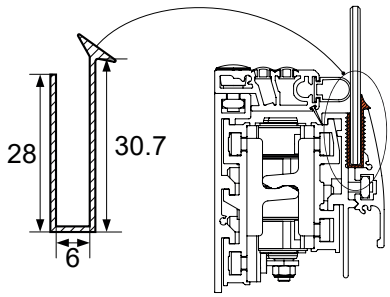

Guarnizione pinza vetro **L=100m** **Cod. 075.0099.03**
Glass clamp gasket

Materiale/*Material* **PVC - 70 Shore**
Colore/*Colour* **Nero/Black**

Tutte le misure sono espresse in **millimetri** */ All measures are expressed in **millimeters***

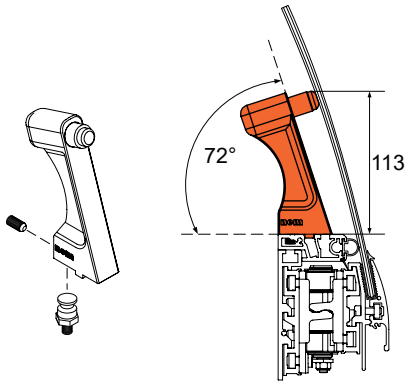

Kit montantino anteriore - pinza 10.5° e vetro curvo **Cod. 150.0039**
Front upright kit - clamp 10.5° and curved glass

Cod. ***150.0039*** *includes:*

- Vite STEI M6x8 / *Grub Screw M6x8* - **Cod. 002.0404.00**
- Tirante fissaggio M8x1 / *M8x1 fixing tie rod* - **Cod. 005.0214.00**
- Montantino compl. Ant 72° / *Complete front upright 72°*

Cod. 150.0039 is suitable only for 10.5° clamp option and curved glass R1016mm

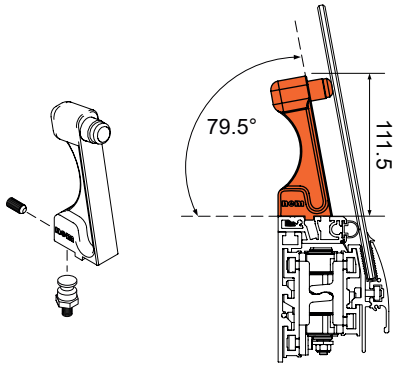

Kit montantino anteriore - pinza 10.5° e vetro dritto **Cod. 150.0035**
Front upright kit - clamp 10.5° and flat glass

Cod. ***150.0035*** *includes:*

- Vite STEI M6x8 / *Grub Screw M6x8* - **Cod. 002.0404.00**
- Tirante fissaggio M8x1 / *M8x1 fixing tie rod* - **Cod. 005.0214.00**
- Montantino compl. Ant 79.5° / *Complete front upright 79.5°*

Cod. 150.0035 is suitable only for 10.5° clamp option and flat glass panel

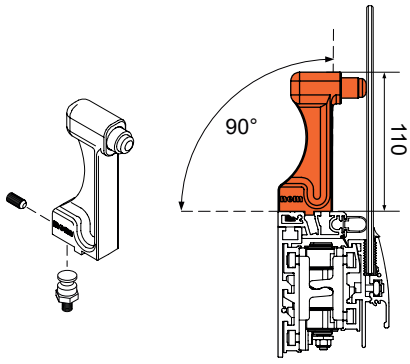

Kit montantino anteriore - pinza 0° e vetro dritto **Cod. 150.0037**
Front upright kit - clamp 0° and flat glass

Cod. ***150.0037*** *includes:*

- Vite STEI M6x8 / *Grub Screw M6x8* - **Cod. 002.0404.00**
- Tirante fissaggio M8x1 / *M8x1 fixing tie rod* - **Cod. 005.0214.00**
- Montantino compl. Ant 90° / *Complete front upright 90°*

Cod. 150.0037 is suitable only for 0° clamp option and flat glass panel

NEM 150 front uprights glass adjustment system

The front upright 150 kit function is to adjust the front glass closed position and align all the front glass panels of a counter line.

The upright adjuster can be screwed and unscrewed by hand to adjust the glass closing position to align multiple glass panels.

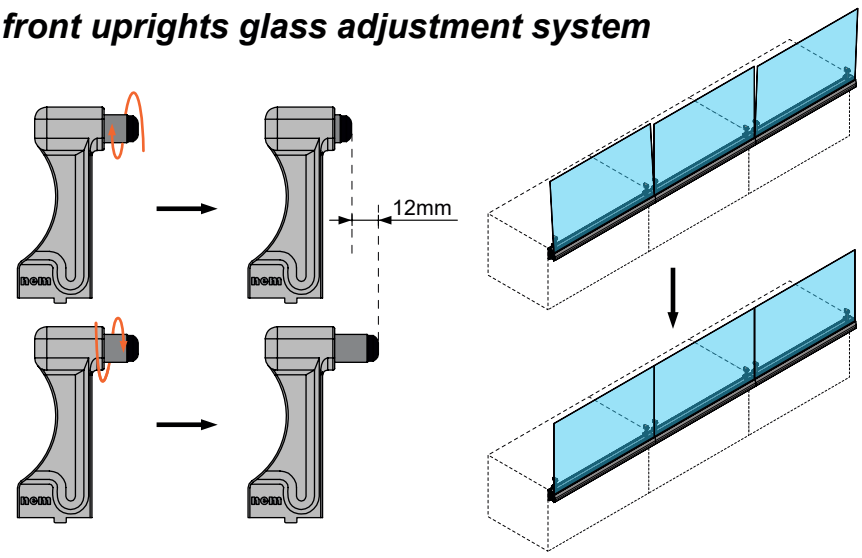

Tutte le misure sono espresse in **millimetri** / *All measures are expressed in* ***millimeters***

Componenti opzionali / *Optional components*

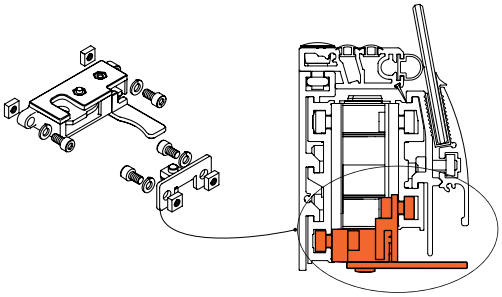

Kit completo serratura e perno **Cod. 150.0067.00**
Complete lock kit with screws

Cod. ***150.0067*** *includes:*

- Assieme serratura compl. 150 / *Compl. Lock system 150* - **Cod. 150.0056.00**
- Assieme perno serratura / *Complete lock pin assembly* - **Cod. 150.0050.00**

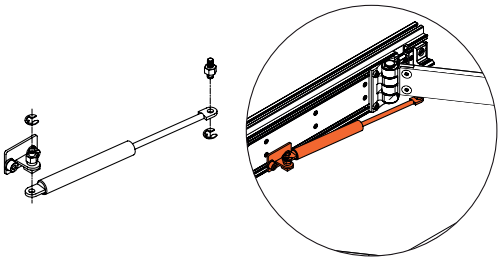

Kit completo pistone per apertura assistita **Cod. 150.0150.00**
Complete gas-spring kit for assisted opening

Cod. ***150.0150.00*** *includes:*

- Pistone 150N corsa 80 / *Gas spring 150N stroke 80* - **Cod. 007.0320.00**
- Minuteria per il fissaggio / *Smallware kit for fixing* - **Cod. 150.0058.00**

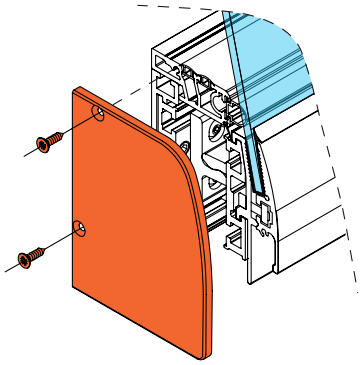

Kit completo tappi laterali (1dx + 1sx) **Cod. 150.1805.00**
Complete endcap kit (1rt + 1lt)

Cod. ***150.0150.00*** *includes:*

- Tappo laterale lav. DX / *Lateral endcap proc. RT* - **Cod. 150.1801.00**
- Tappo laterale lav. SX / *Lateral endcap proc. LT* - **Cod. 150.1802.00**
- Viti di fissaggio 3.9x16 / *Fixing screws 3.9x16* - **Cod. 002.1505.00 - 4pcs**

Componenti di ricambio / *Spare parts*

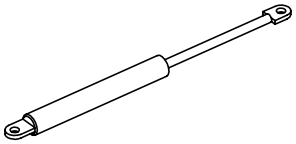

Pistone per apertura assistita 150N corsa 80mm **Cod. 007.0320.00**
Assisted opening gas spring 150N stroke 80mm

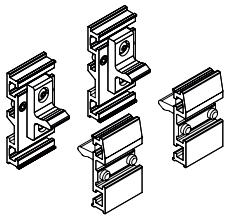

Assieme blocco allineamento / chiusura **Cod. 150.0059.00**
Compl. Alignment / closing kit

Sistema **NEM 150**

Esempi d'applicazione **con vetro curvo** / *Application examples with* ***curved glass panel***

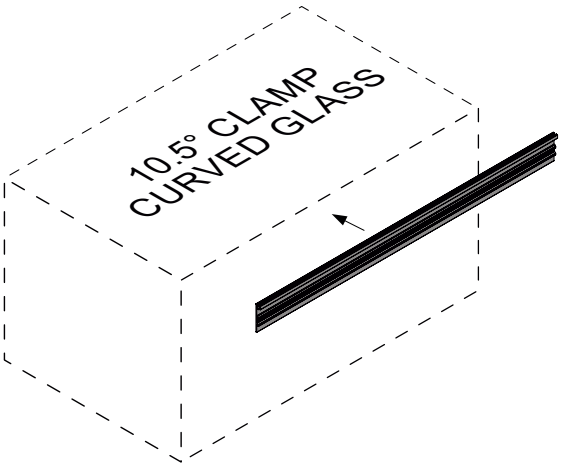

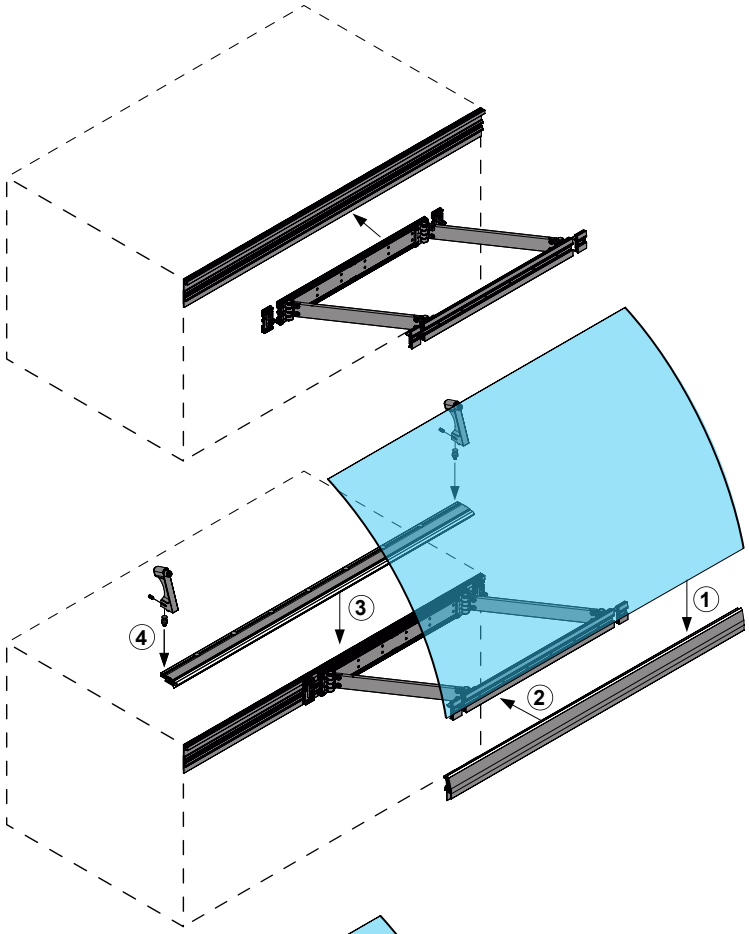

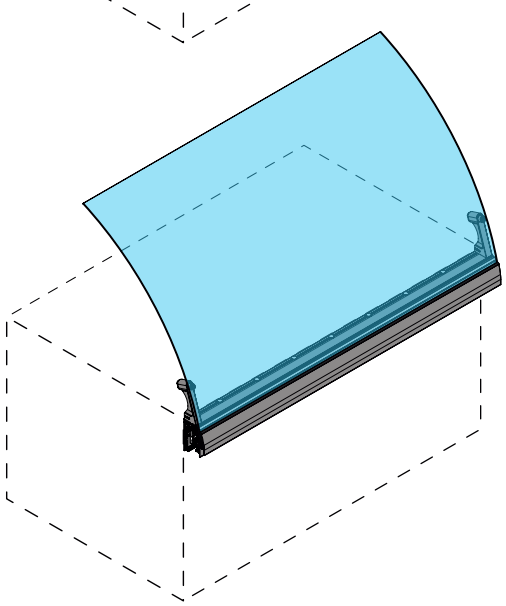

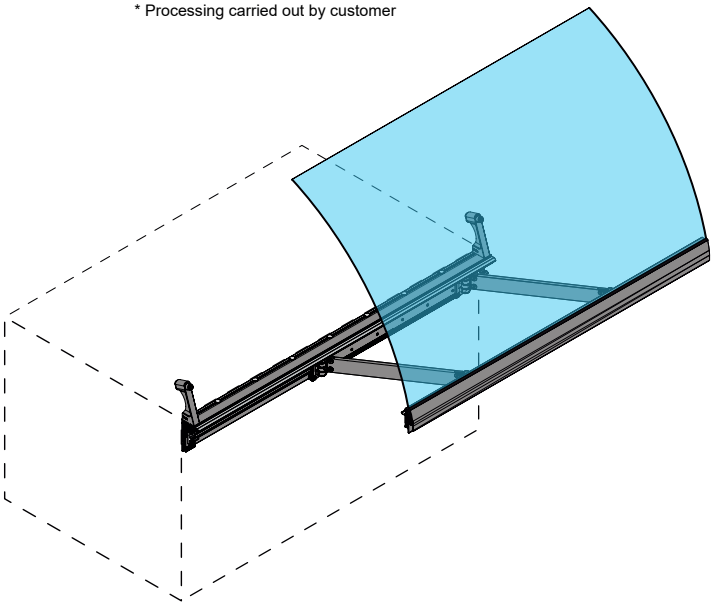

Codici utilizzati nel esempio
Codes used in the example

	**150.7210*** Profilo base portante tagliato a misura *Load bearing base profile cut at measure*
	**150.3300** Meccanica di apertura compl. 1215/1414mm *Complete opening device 1215/1414mm*
	**150.7650*** Assieme pinza vetro 10.5° tagliata a misura *10.5° glass clamp assembly cut at measure*
	**150.7750*** Profilo carter superiore tagliato a misura *Top cover profile, cut at measure*
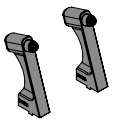	**150.0039.00** Kit montantino anteriore - pinza 10.5° e vetro curvo *Front upright kit - clamp 10.5° and curved glass*
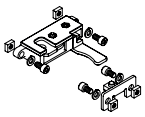	**150.0067.00** Kit completo serratura e perno *Complete lock kit with screws*
	**Guarnizioni / Gasket** Profilo di chiususa /*Cover profile:* **1) 150.0199.00** **2) 090.1199.00** **3) 550.0099.00**
	**Guarnizioni / Gasket** Assieme pinza /*Clamp assembly:* **1) 075.0099.03**

* Lavorazioni a carico del cliente
* Processing carried out by customer

Sistema **NEM 150**

Esempi d'applicazione **con vetro piano inclinato** / *Application examples with **flat tilted glass panel***

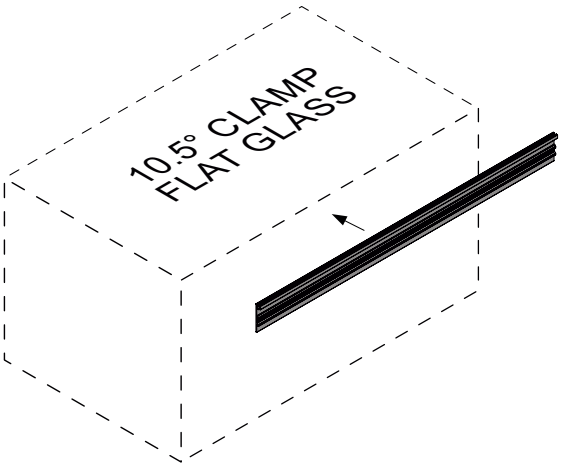

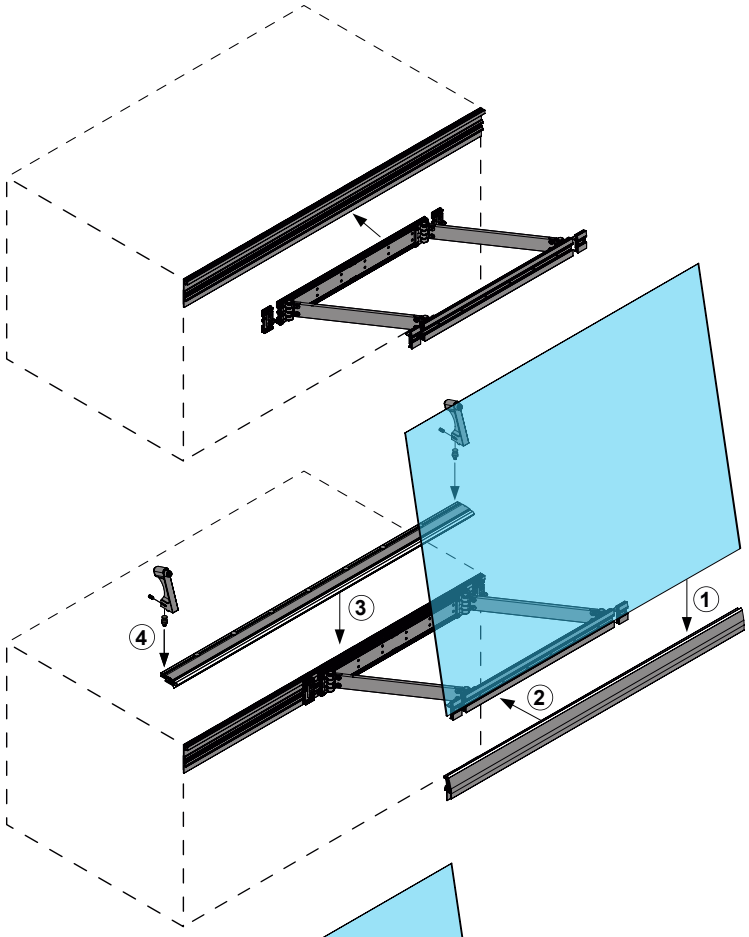

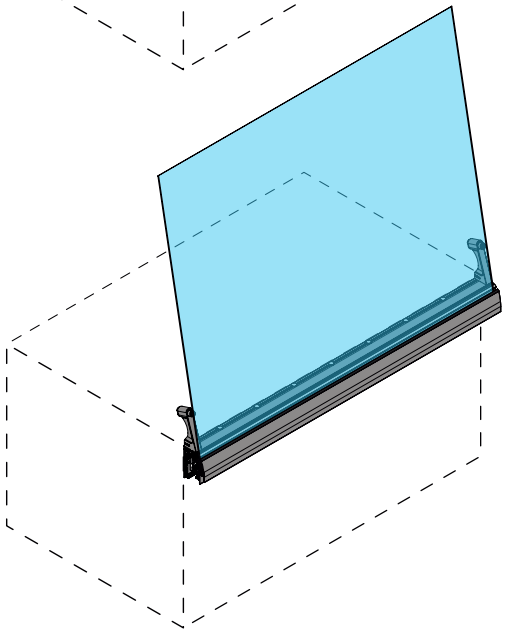

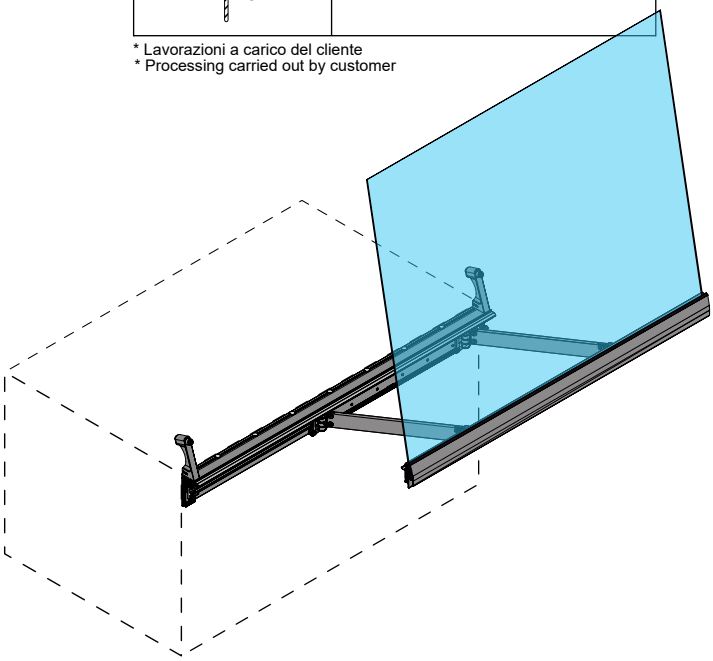

Codici utilizzati nel esempio
Codes used in the example

	**150.7210*** Profilo base portante tagliato a misura *Load bearing base profile cut at measure*
	**150.3300** Meccanica di apertura compl. 1215/1414mm *Complete opening device 1215/1414mm*
	**150.7650*** Assieme pinza vetro 10.5° tagliata a misura *10.5° glass clamp assembly cut at measure*
	**150.7750*** Profilo carter superiore tagliato a misura *Top cover profile, cut at measure*
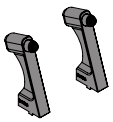	**150.0035.00** Kit montantino anteriore - pinza 10.5° e vetro piatto *Front upright kit - clamp 10.5° and flat glass*
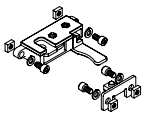	**150.0067.00** Kit completo serratura e perno *Complete lock kit with screws*
	**Guarnizioni / Gasket** Profilo di chiususa /*Cover profile:* **1) 150.0199.00** **2) 090.1199.00** **3) 550.0099.00**
	**Guarnizioni / Gasket** Assieme pinza /*Clamp assembly:* **1) 075.0099.03**

* Lavorazioni a carico del cliente
* Processing carried out by customer

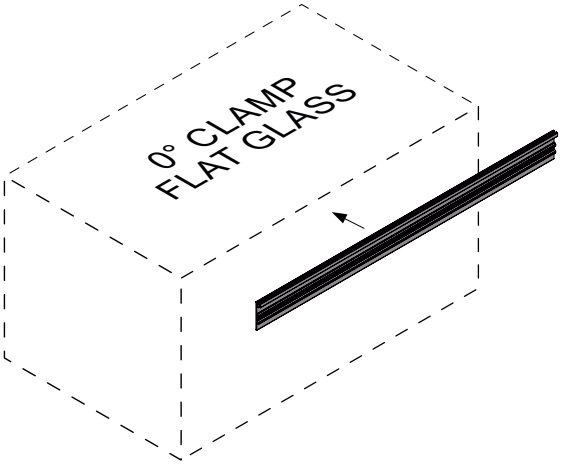

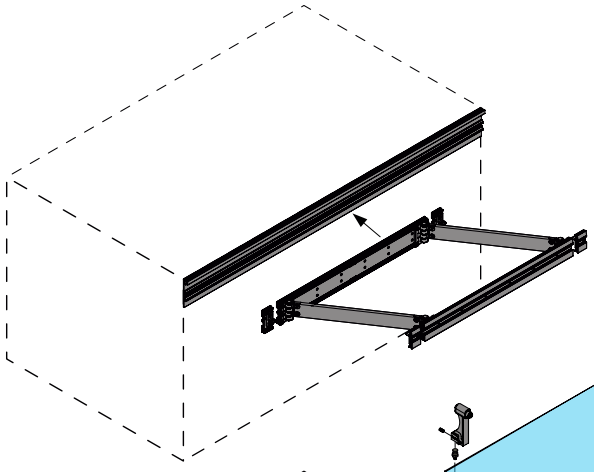

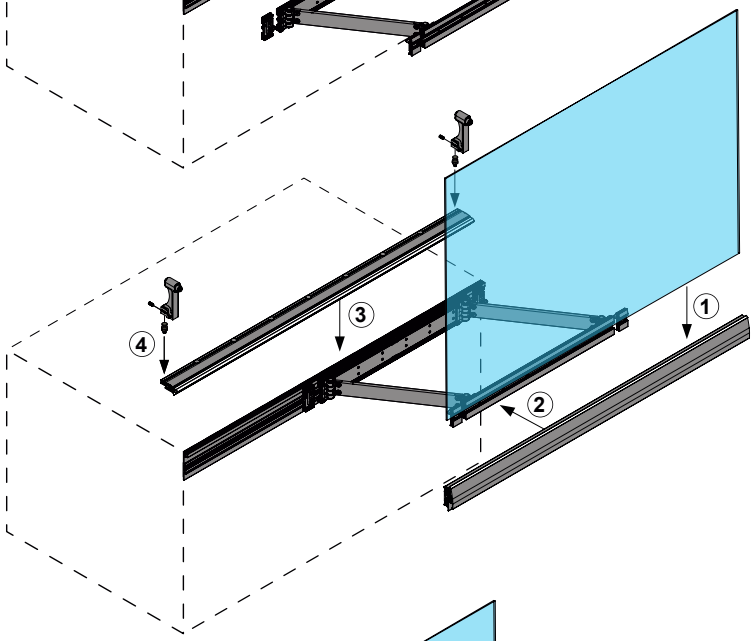

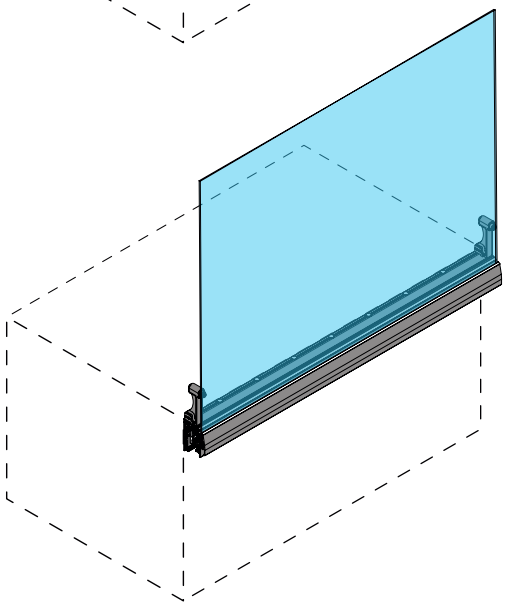

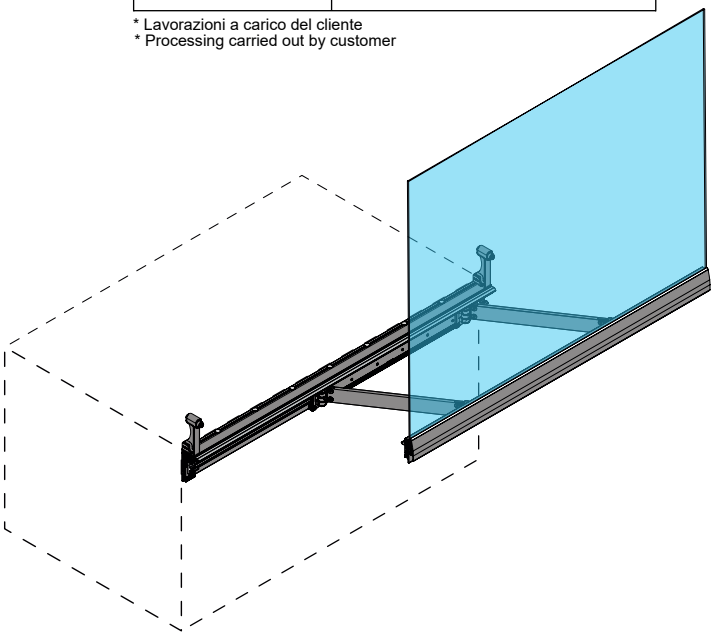

Codici utilizzati nel esempio
Codes used in the example

	**150.7210*** Profilo base portante tagliato a misura *Load bearing base profile cut at measure*
	**150.3300** Meccanica di apertura compl. 1215/1414mm *Complete opening device 1215/1414mm*
	**150.8050*** Assieme pinza vetro 0° tagliata a misura *0° glass clamp assembly cut at measure*
	**150.7750*** Profilo carter superiore tagliato a misura *Top cover profile, cut at measure*
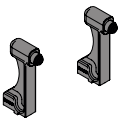	**150.0037.00** Kit montantino anteriore - pinza 0° e vetro piatto *Front upright kit - clamp 0° and flat glass*
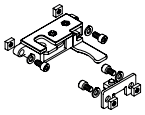	**150.0067.00** Kit completo serratura e perno *Complete lock kit with screws*
	**Guarnizioni / Gasket** Profilo di chiususa /*Cover profile:* **1) 150.0199.00** **2) 090.1199.00** **3) 550.0099.00**
	**Guarnizioni / Gasket** Assieme pinza /*Clamp assembly:* **1) 075.0099.03**

* Lavorazioni a carico del cliente
* Processing carried out by customer

Plafoniere - LED
Light canopies - LED

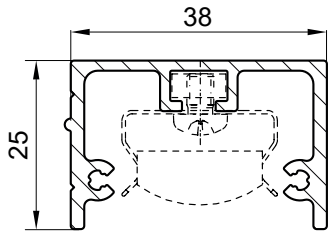

Profilo lampada 076.1300 **L=5000mm** **Cod. 076.1300**
Light canopy profile 076.1300

Ottima soluzione da abbinare con profilo scorrevole posteriore 076, vedi pag. 16
Optimal solution combined with rear sliding profile 076, see pag. 16

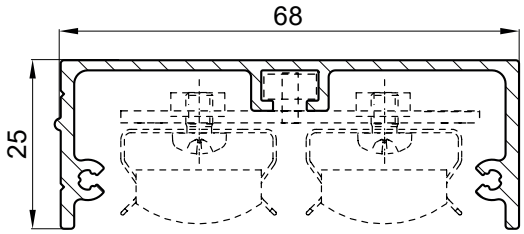

Profilo lampada 076.1200 **L=5000mm** **Cod. 076.1200**
Light canopy profile 076.1200

Ottima soluzione da abbinare con profilo scorrevole posteriore 076, vedi pag. 16
Optimal solution combined with rear sliding profile 076, see pag. 16

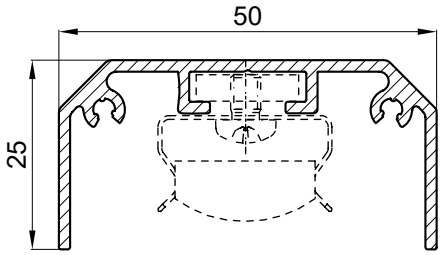

Profilo lampada **L=5000mm** **Cod. 095.0200**
Light canopy profile

Per dettagli su codici, componenti e fissaggio vedi catalogo 230 pag.10
For details regarging codes, components and fixing see catalogue 230 pag.10

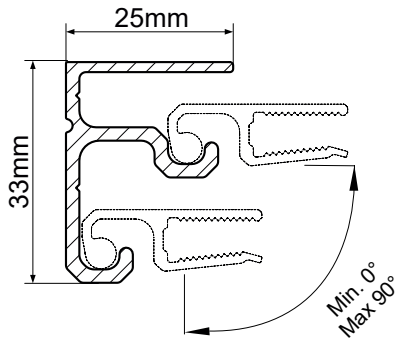

Profilo scorrevoli posteriori 076 **L=5200mm** **Cod. 076.1400**
Rear sliding profile 076

Ottima soluzione da abbinare con profili plafoniere 076, vedi pag. 15, ed esempio sotto
Optimal solution combined with canopy profiles 076, see pag. 15, and example below

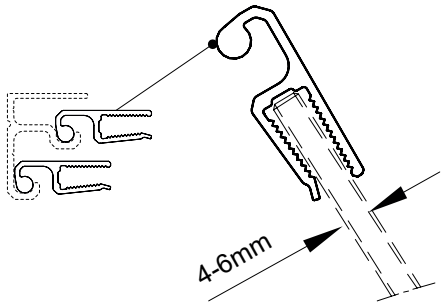

Profilo pinza scorrevoli 4-6mm **L=5000mm** **Cod. 064.3000**
Clamp sliding 4-6mm profile

Abbinamento profili 076 con scorrevole 076 / *Profile 076 combine with sliding profile 076*

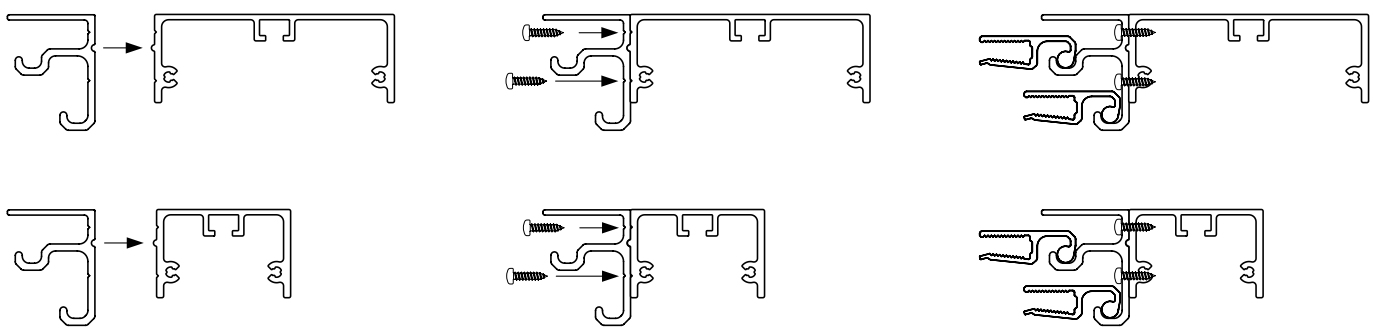

Mensole complete 067
Complete shelves 067

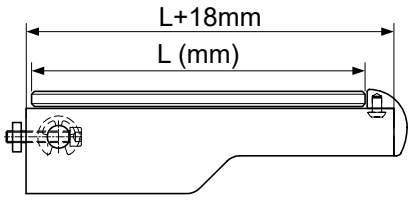

Kit mensola completa mod. 067
Compl. shelf mod. 067 assembly

L=195	**Cod. 067.1970**
L=245	**Cod. 067.1971**
L=295	**Cod. 067.1275**
L=345	**Cod. 067.1276**
L=395	**Cod. 067.1277**
L=445	**Cod. 067.1278**

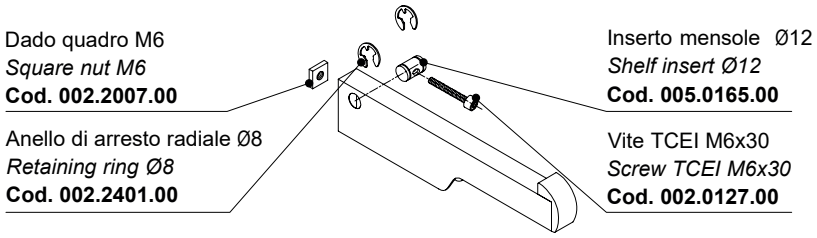

Minuteria per fissaggio inclusa nei codici kit sopra / *Fixing smallware incluced in the above assembly codes.*

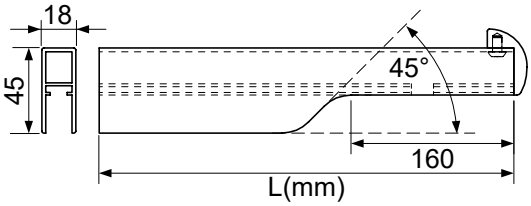

Mensola semifinita 0°
Semifinished shelf 0°

L=350	**Cod. 067.1750**
L=500	**Cod. 067.1230**

Minuteria non inclusa; lavorazione per il fissaggio a carico del cliente / *Smallware not incluced; processing for fixing carried our by customer*

Minuteria per mensole
Shelf smallwares

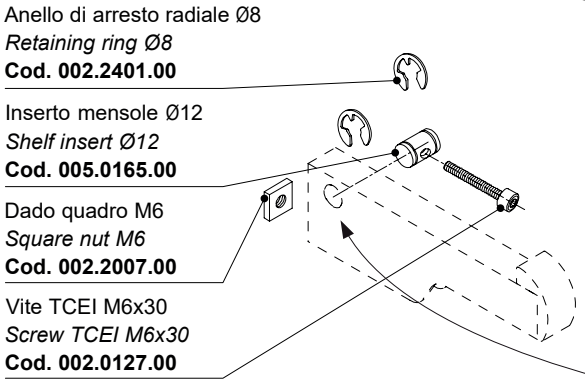

Kit minuteria fissaggio mensole 90°
90° shelf smallware fixing kit

Cod. 001.0591.00

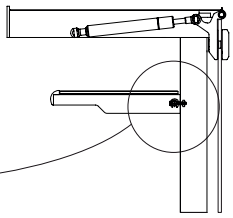

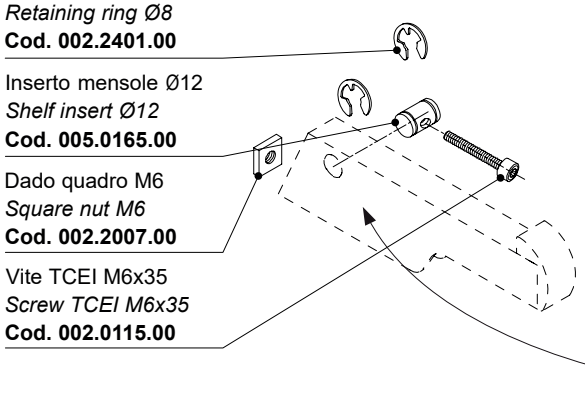

Kit minuteria fissaggio mensole inclinate
Sloped shelf smallware fixing kit

Cod. 001.0526.00

