Sistema **NEM 154**
*System **NEM 154***

PATENT GRANTED

Sistema d'apertura a scorrimento laterale per vetri piani lineari temprati

Side-slide opening system for tempered flat linear glass panels

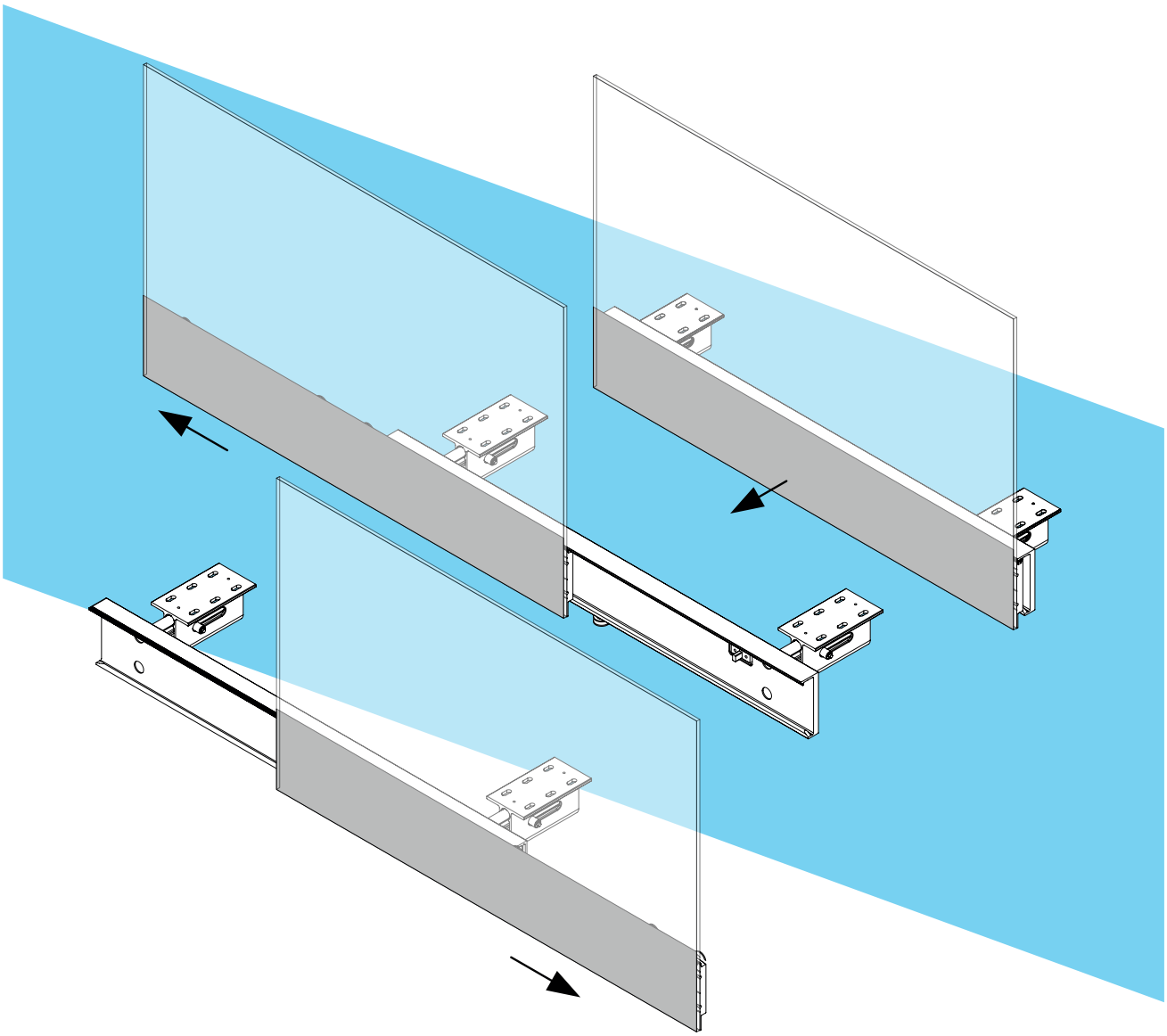

19/06/25

Nem srl - via degli Artigiani 9 - 34070 San Pier d'Isonzo (GO) - ITALY - tel. +39 0481 70297 - nem@nemsrl.it - www.nemsrl.it

All rights reserved. Any unauthorized copying, reproduction and lending is strictly prohibited.

Sistema **NEM 154**

Introduzione generale / *General introduction*

The system **NEM 154** is a lateral slide opening system for the front glass of cabinets and refrigerated display cases. This solution is suitable for **6mm** and **8mm** front glass thickness.

Compared to the classic lift-up and tilt-down glass opening solutions, the system **NEM 154** is much safer, as the glass is not lifted and suspended above the head of the operator, and allows to optimize the counter management time, as the front access to the counter inner side is much more convenient, for both goods front loading and ordinary cleaning. Furthermore, compared to our classic system NEM 150, the new solution NEM 154 provides a much more modern and clean front design, with a full glass view, but at the same time a more convenient opening feature, having the double side opening possibility.

Beyond all the technical advantages, system NEM 154 optimizes also visibility of exposed products, as all the opening hardware is hidden in the base, and has no visible impact on the goods.

Funzionamento / Functioning

PATENT GRANTED

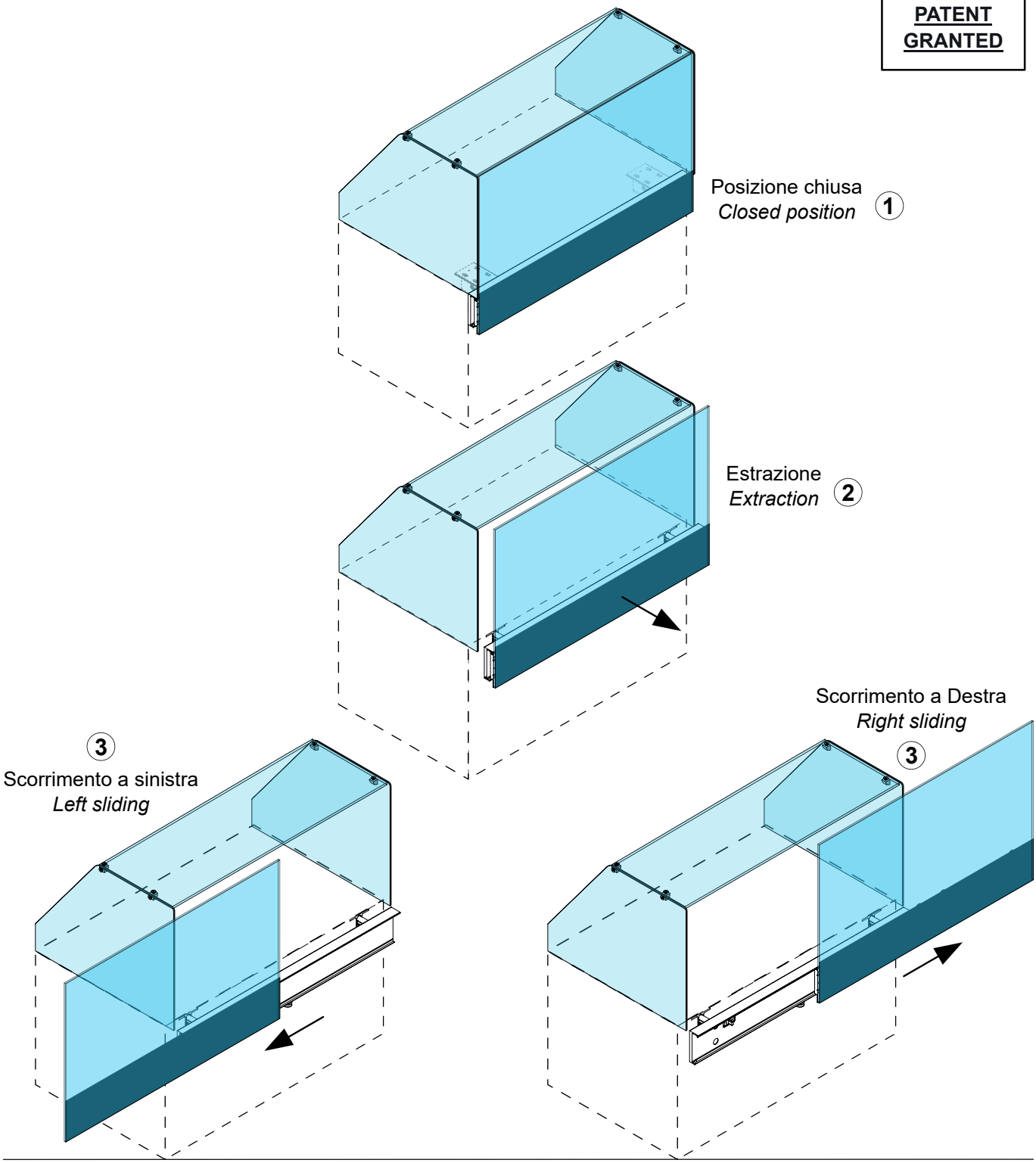

Sistema **NEM 154**

Meccaniche di apertura universali / *Universal opening devices*

The system NEM 154 opening device is composed by two components, the extraction device and the lateral sliding device. The first one has just one dimension option, while the sliding device has 3 standard lengths, to be chosen according to the glass panel length.

Meccanica di estrazione standard / Standard extraction device

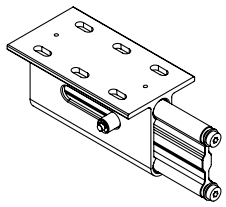

Meccanica di estrazione compl. C 55mm **Cod. 154.0002**
Compl. extraction device, stroke 55mm

Meccaniche di scorrimento laterale standard / Standard lateral sliding devices

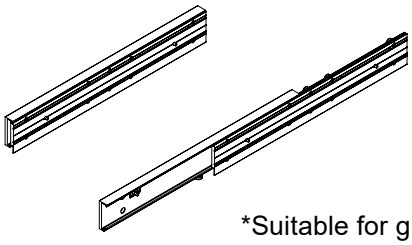

Meccanica di apertura compl. L=900mm* **Cod. 154.6002**
*Compl. opening device L=900mm**

*Suitable for glass clamp length between 1015 and 1214mm; estimated opening width 635mm

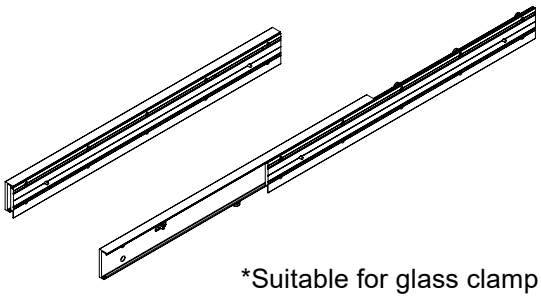

Meccanica di apertura compl. L=1250mm* **Cod. 154.6003**
*Compl. opening device L=1250mm**

*Suitable for glass clamp length between 1215 and 1414mm; estimated opening width 820mm

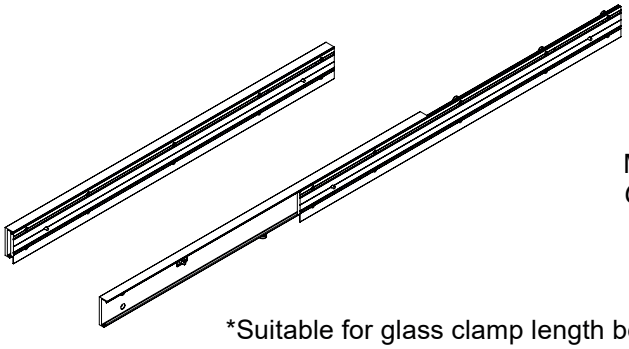

Meccanica di apertura compl. L=1500mm* **Cod. 154.6004**
*Compl. opening device L=1500mm**

*Suitable for glass clamp length between 1415 and 1560mm; estimated opening width 1000mm

Indicazioni scelta meccaniche / Device choice suggestion

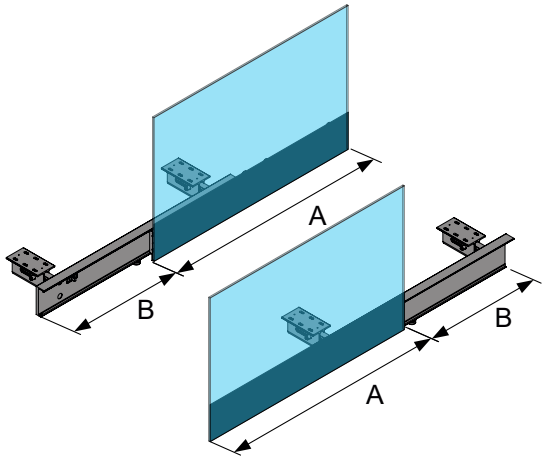

A	**B**	
Lunghezza pinza vetro ***Glass clamp length***	**Apertura** ***Opening***	**Meccanica d'apertura** ***Opening device***
900mm → 1014mm 35 $^{7}/_{16}$in → 39 $^{7}/_{8}$in	~ 545mm ~ 21 $^{1}/_{2}$in	**Cod. 154.6002.00**
1015mm → 1214mm 39 $^{15}/_{16}$in → 47 $^{13}/_{16}$in	~ 635mm ~ 25in	**Cod. 154.6003.00**
1215mm → 1414mm 47 $^{7}/_{8}$in → 55 $^{5}/_{8}$in	~ 820mm ~ 32 $^{1}/_{4}$in	**Cod. 154.6004.00**

Sistema **NEM 154**

Dimensioni generali (mm) / General dimen*sions (mm)*

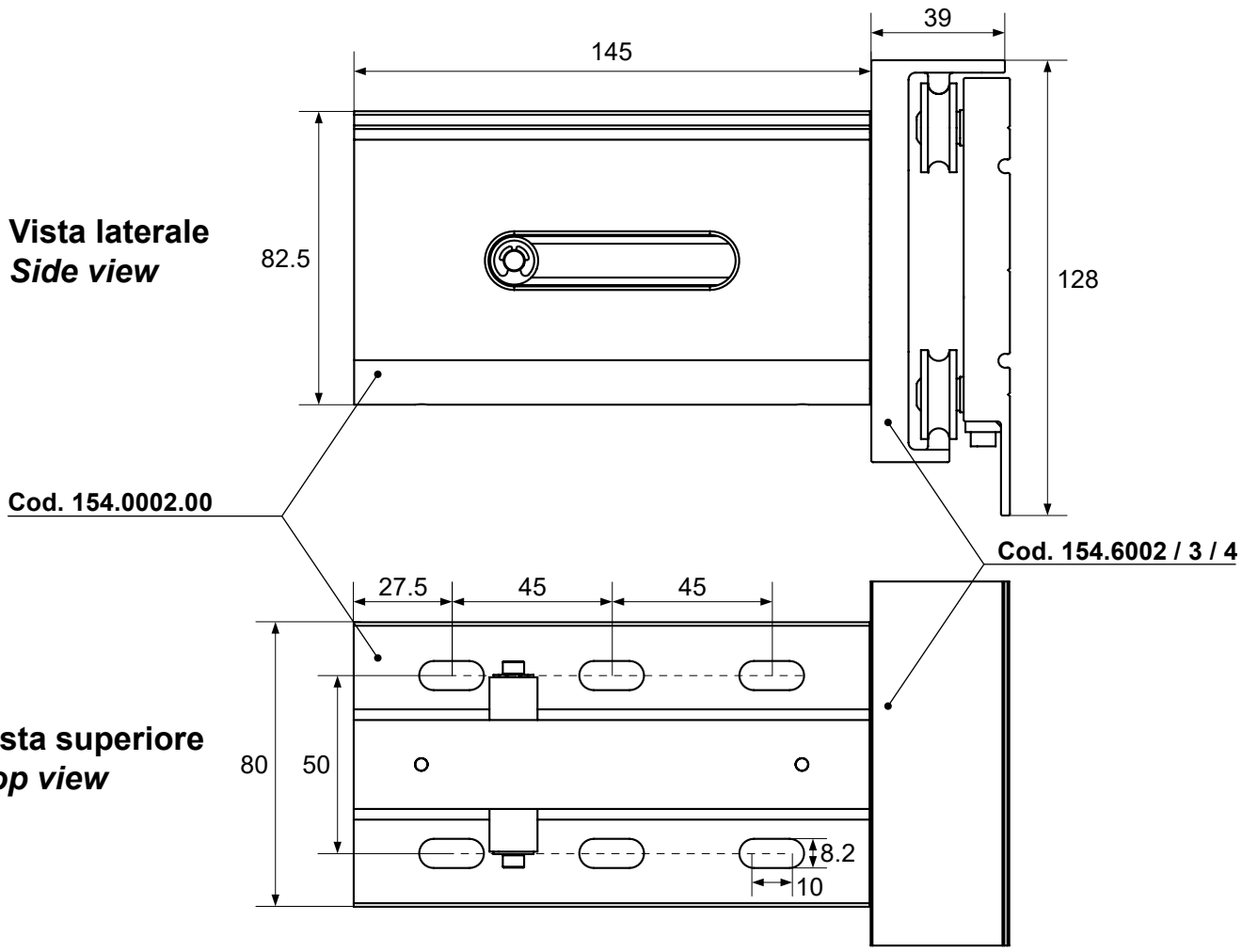

Dimensioni vetro frontale / Front glass panel dimensions

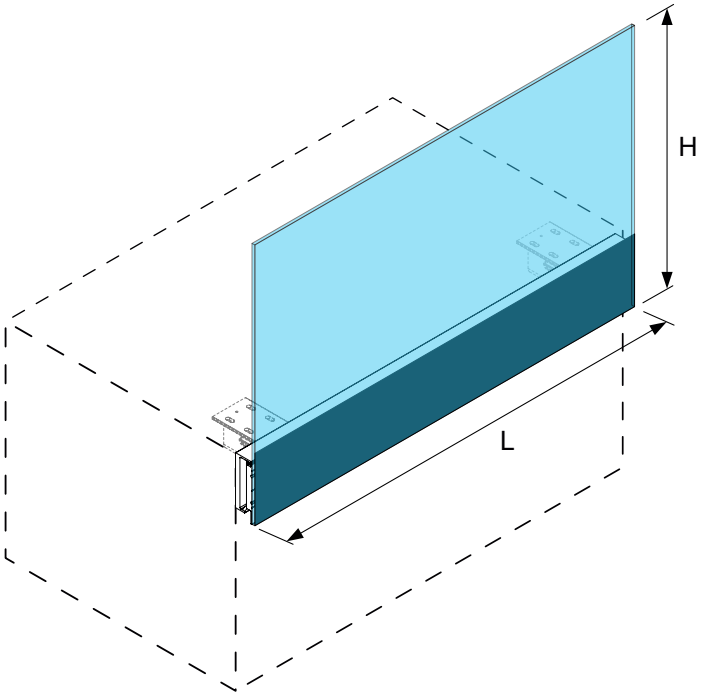

Lunghezza massima vetro (L) = **1600mm / 63in**
Maximum glass length (L) = ***1600mm*** **/ 63in**

Altezza massima vetro (H) = **600mm / 23.62in**
Maximum glass height (H) = ***600mm*** **/ 23.62in**

<u>*Usare esclusivamente vetro temprato</u>
<u>Use exclusively tempered glass</u>

*NEM srl declina ogni responsabilità civile e penale in caso di rotture dei vetri dovute a loro difetti o errato montaggio.

**NEM srl undertakes neither public nor criminal liability in case of glass breakages due to their defects or to a wrong assembling.*

NEM srl declina ogni responsabilità civile e penale in caso di rotture dei vetri dovute a loro difetti o errato montaggio o utilizzo.
NEM srl. undertakes neither public nor criminal liability in case of glass breakages due to their defects or to a wrong assembling or usage.

Kit di fissaggio vetro frontale / Front glass fastening kit

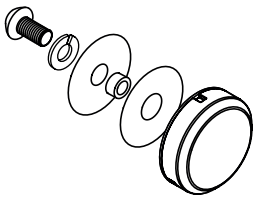

Kit fissaggio frontale borchia tonda per vetro 6/8mm **Cod. 074.0101***
Front round boss fastening kit for 6/8mm glass

* Il kit completo **079.0101** include / *compl. Assembly **079.0101** includes :*

- Borchia frontale tonda / *Front round boss* - **1pc**
- Kit guarnizioni fissaggio vetro / *Glass fixing gasket kit* - **1pc**
- Minuteria di fissaggio / *Fixing smallware* - **1pc**

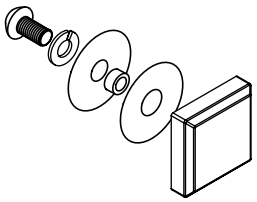

Kit fissaggio frontale borchia quadra per vetro 6/8mm **Cod. 074.0102***
Front square boss fastening kit for 6/8mm glass

* Il kit completo **079.0102** include / *compl. Assembly **079.0102** includes :*

- Borchia frontale quadra / *Front square boss* - **1pc**
- Kit guarnizioni fissaggio vetro / *Glass fixing gasket kit* - **1pc**
- Minuteria di fissaggio / *Fixing smallware* - **1pc**

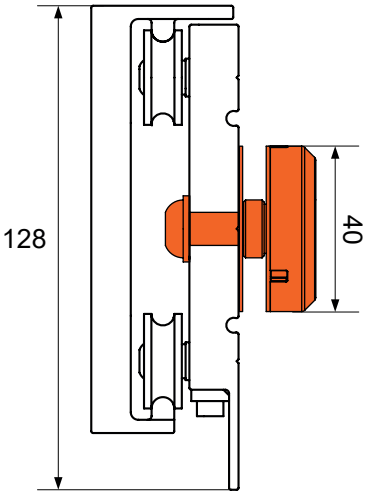

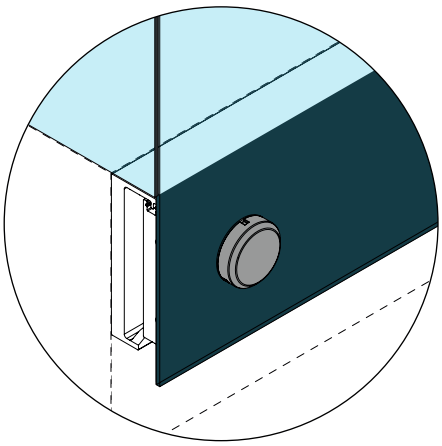

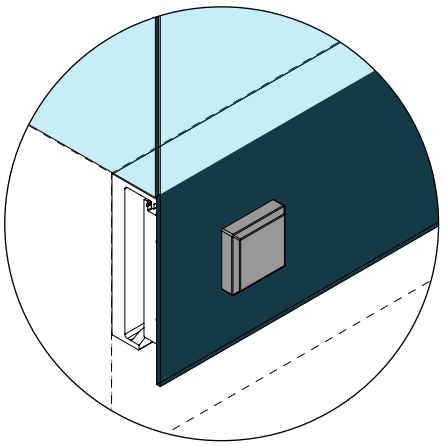

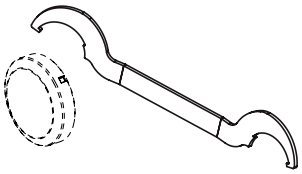

Chiave di serraggio borchia 087 40mm **Cod. 006.0184.00**
087 40mm front boss fastening tool

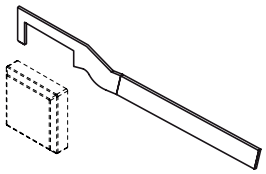

Chiave di posizionamento borchia 087 SQ 40mm **Cod. 006.0185.00**
087 40mm SQ front boss positioning tool

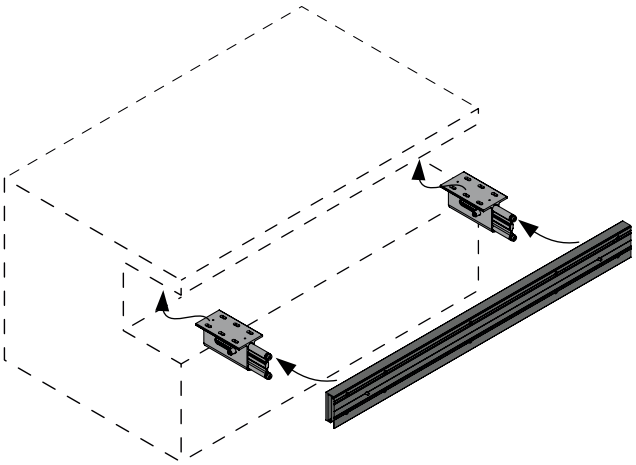

Codici utilizzati nel esempio
Codes used in the example

	**154.0002*** Meccanica di estrazione compl. C 55mm Compl. extraction device, stroke 55mm
	**154.6003.00** Meccanica di apertura compl. L=1250mm* Compl. opening device L=1250mm*

* Lavorazioni a carico del cliente
* Processing carried out by customer

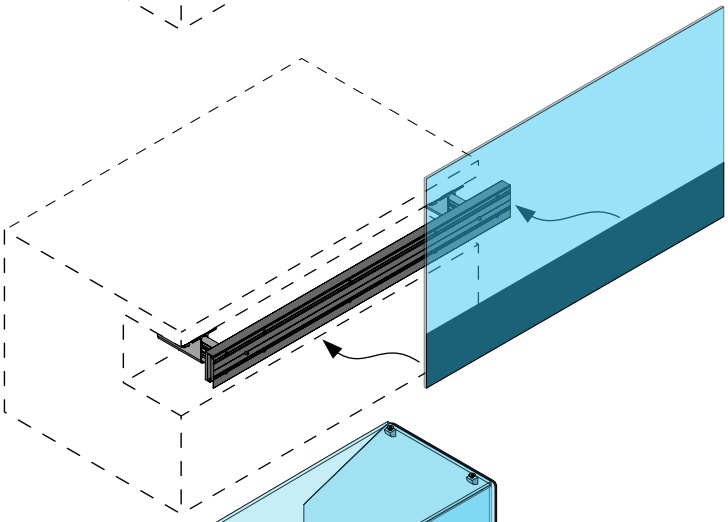

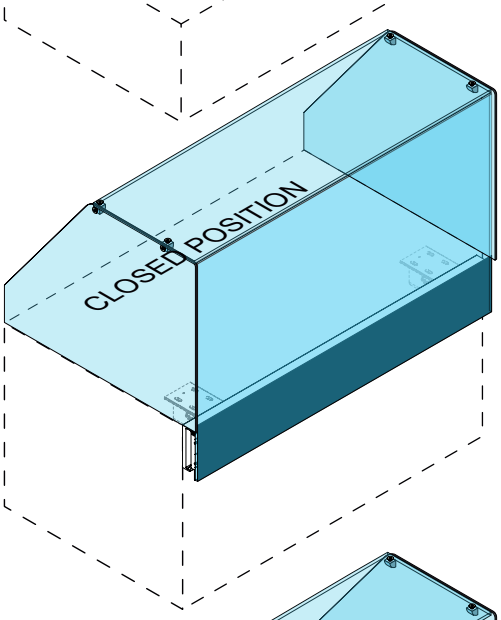

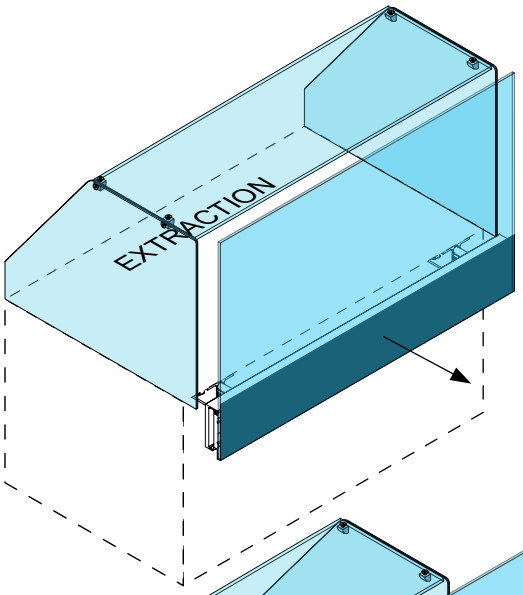

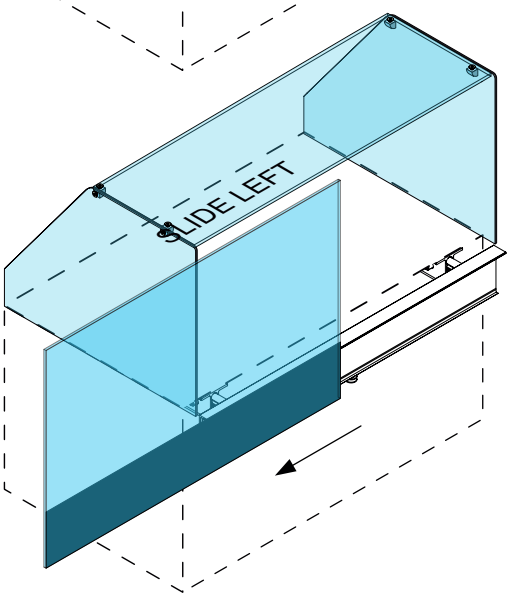

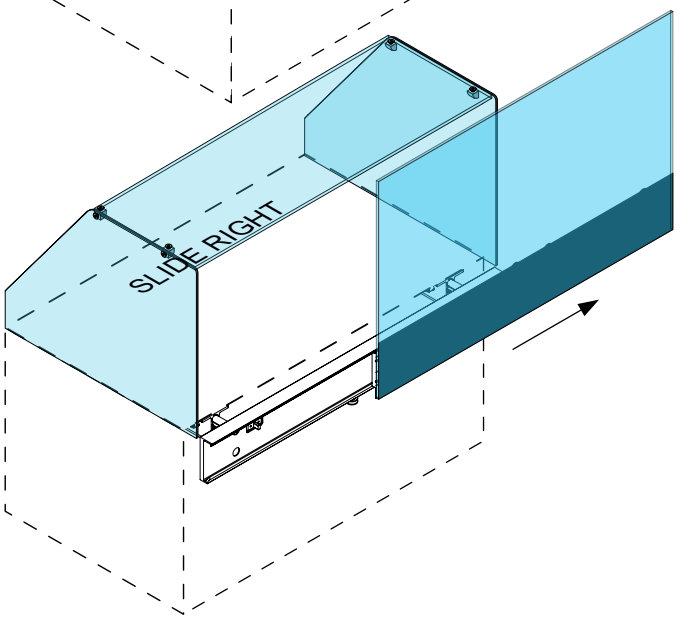

Plafoniere - LED
Light canopies - LED

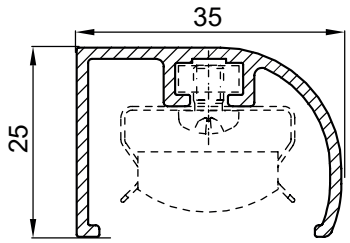

Profilo lampada 051.0200 **L=5000mm** **Cod. 051.0200**
Light canopy profile 051.0200

Per dettagli su codici, componenti e fissaggio vedi catalogo 230 pag.07
For details regarging codes, components and fixing see catalogue 230 pag.07

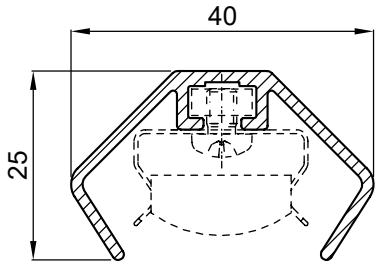

Profilo lampada 051.2200 **L=5000mm** **Cod. 051.2200**
Light canopy profile 051.2200

Per dettagli su codici, componenti e fissaggio vedi catalogo 230 pag.08
For details regarging codes, components and fixing see catalogue 230 pag.08

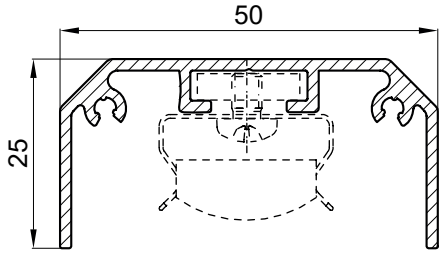

Profilo lampada 095.0200 **L=5000mm** **Cod. 095.0200**
Light canopy profile 095.0200

Per dettagli su codici, componenti e fissaggio vedi catalogo 230 pag.10
For details regarging codes, components and fixing see catalogue 230 pag.10

NEW

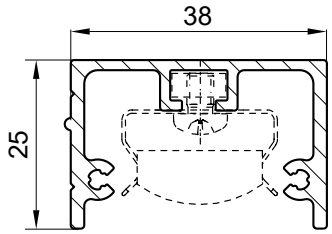

Profilo lampada 076.1300 **L=5000mm** **Cod. 076.1300**
Light canopy profile 076.1300

Ottima soluzione da abbinare con profilo scorrevole posteriore 076, vedi pag. 16
Optimal solution combined with rear sliding profile 076, see pag. 16

NEW

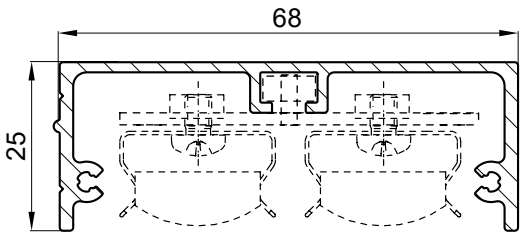

Profilo lampada 076.1200 **L=5000mm** **Cod. 076.1200**
Light canopy profile 076.1200

Ottima soluzione da abbinare con profilo scorrevole posteriore 076, vedi pag. 06
Optimal solution combined with rear sliding profile 076, see pag. 06

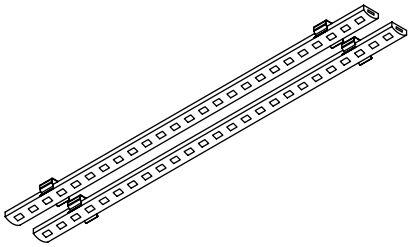

Lampade LED a barra mod. 051 (vedi catalogo 230 pag.03)
LED light bars mod. 051 (see catalogue 230 pag.03)

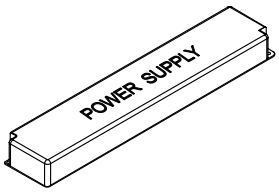

Alimentatori a corrente continua - 12V (vedi catalogo 230 pag.06)
Power supplies - 12V (see catalogue 230 pag.06)

Profili scorrevoli posteriori
Rear sliding profiles

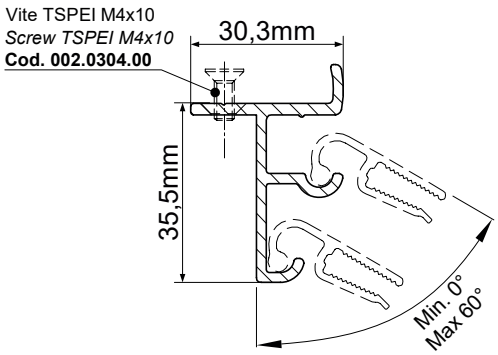

Profilo scorrevoli posteriori 068 — **L=5200mm** **Cod. 068.2150**
Rear sliding profile 068

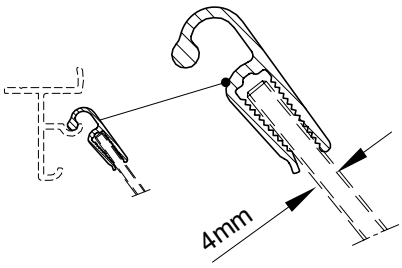

Profilo pinza scorrevoli 4mm — **L=5000mm** **Cod. 064.1300**
Clamp sliding 4mm profile

Pinza scorrevoli per angoli — **L=30mm** **Cod. 064.1205**
Clamp sliding for corners

NEW

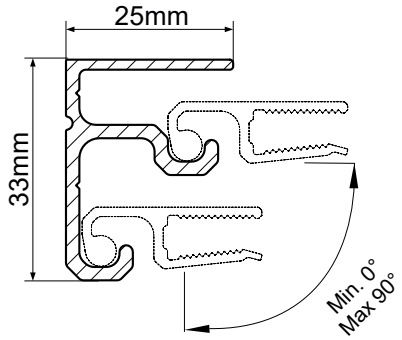

Profilo scorrevoli posteriori 076 — **L=5200mm** **Cod. 076.1400**
Rear sliding profile 076

Ottima soluzione da abbinare con profili plafoniere 076, vedi pag. 07, ed esempio sotto
Optimal solution combined with canopy profiles 076, see pag. 07, and example below

NEW

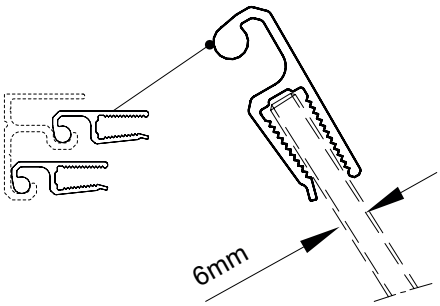

Profilo pinza scorrevoli 6mm — **L=5000mm** **Cod. 064.3000**
Clamp sliding 6mm profile

Abbinamento profili 076 con scorrevole 076 / ***Profile 076 combine with sliding profile 076***

NEW

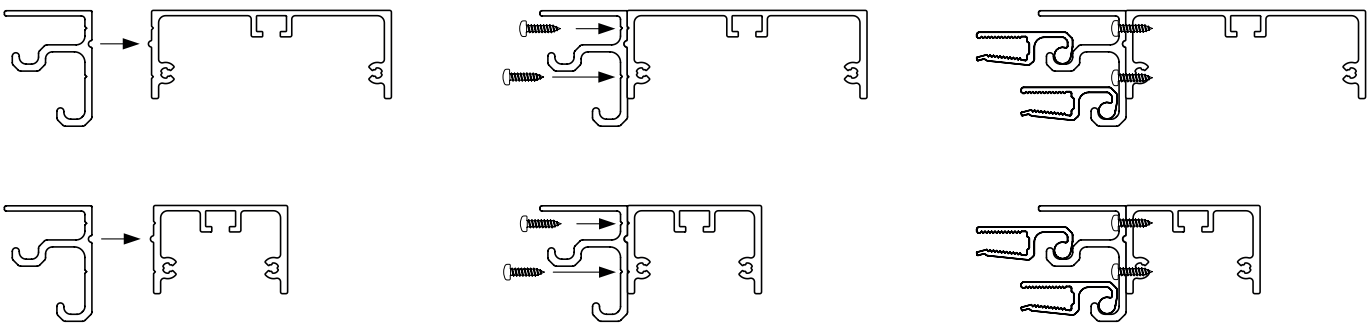

Mensole complete 076
Complete shelves 076

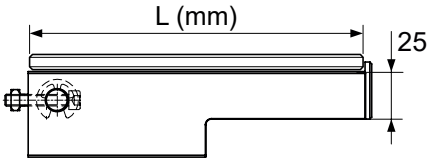

Kit mensola completa mod. 076 H25
Compl. shelf mod. 076 assembly H25

L=195	**Cod. 067.2007**
L=245	**Cod. 067.2010**
L=295	**Cod. 067.2012**
L=345	**Cod. 067.2014**
L=395	**Cod. 067.2040**
L=445	**Cod. 067.2042**

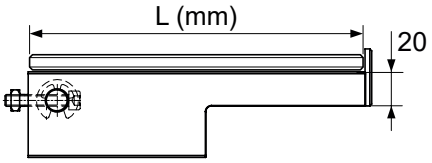

Kit mensola completa mod. 076 H20
Compl. shelf mod. 076 assembly H20

L=195	**Cod. 067.2020**
L=245	**Cod. 067.2022**
L=295	**Cod. 067.2024**
L=345	**Cod. 067.2044**
L=395	**Cod. 067.2046**
L=445	**Cod. 067.2030**

Minuteria per fissaggio 001.0591.00 inclusa nei codici kit sopra / *Fixing smallware 001.0591.00 incluced in the above assembly codes.*

Mensole semilavorate / *Semi-processed shelves*

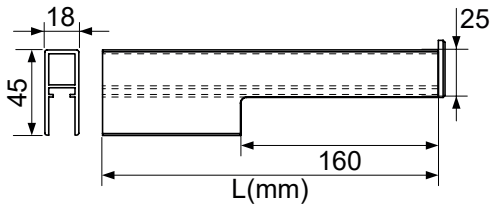

Mensola semifinita 0° H25
Semifinished shelf 0° H25

L=350	**Cod. 067.2032**
L=500	**Cod. 067.2034**

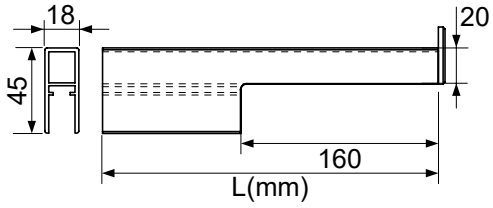

Mensola semifinita 0° H20
Semifinished shelf 0° H20

L=350	**Cod. 067.2036**
L=500	**Cod. 067.2038**

Minuteria non inclusa; lavorazione per il fissaggio a carico del cliente / *Smallware not incluced; processing for fixing carried our by customer*

Minuteria per mensole
Shelf smallwares

Anello di arresto radiale Ø8
Retaining ring Ø8
Cod. 002.2401.00

Inserto mensole Ø12
Shelf insert Ø12
Cod. 005.0165.00

Dado quadro M6
Square nut M6
Cod. 002.2007.00

Vite TCEI M6x30
Screw TCEI M6x30
Cod. 002.0127.00

Kit minuteria fissaggio mensole 90° **Cod. 001.0591.00**
90° shelf smallware fixing kit

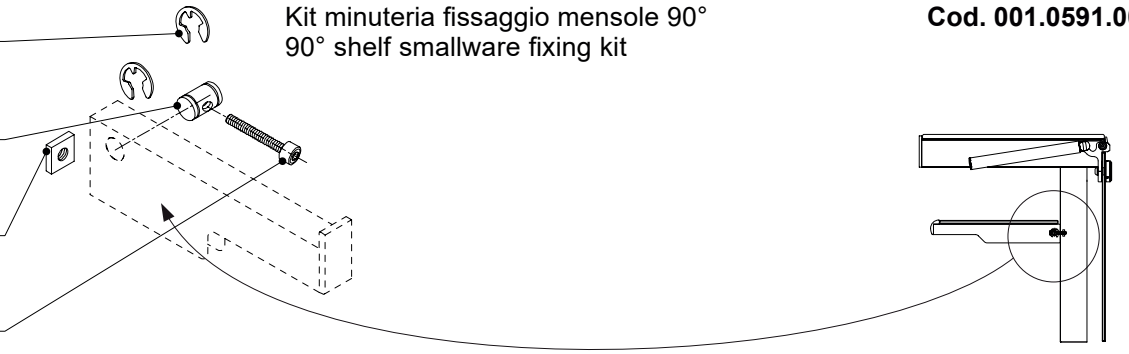

Anello di arresto radiale Ø8
Retaining ring Ø8
Cod. 002.2401.00

Inserto mensole Ø12
Shelf insert Ø12
Cod. 005.0165.00

Dado quadro M6
Square nut M6
Cod. 002.2007.00

Vite TCEI M6x35
Screw TCEI M6x35
Cod. 002.0115.00

Kit minuteria fissaggio mensole inclinate **Cod. 001.0526.00**
Sloped shelf smallware fixing kit



Mensole complete 067
Complete shelves 067

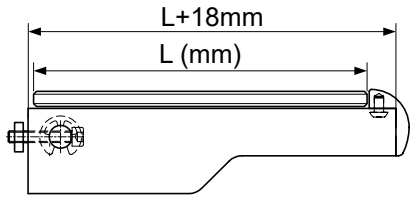

Kit mensola completa mod. 067
Compl. shelf mod. 067 assembly

L=195	**Cod. 067.1970**
L=245	**Cod. 067.1971**
L=295	**Cod. 067.1275**
L=345	**Cod. 067.1276**
L=395	**Cod. 067.1277**
L=445	**Cod. 067.1278**

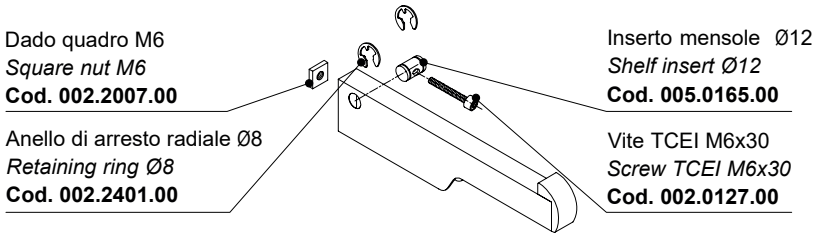

Minuteria per fissaggio inclusa nei codici kit sopra / *Fixing smallware incluced in the above assembly codes.*

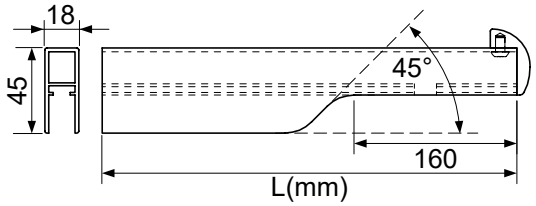

Mensola semifinita 0°
Semifinished shelf 0°

L=350	**Cod. 067.1750**
L=500	**Cod. 067.1230**

Minuteria non inclusa; lavorazione per il fissaggio a carico del cliente / *Smallware not incluced; processing for fixing carried our by customer*

Minuteria per mensole
Shelf smallwares

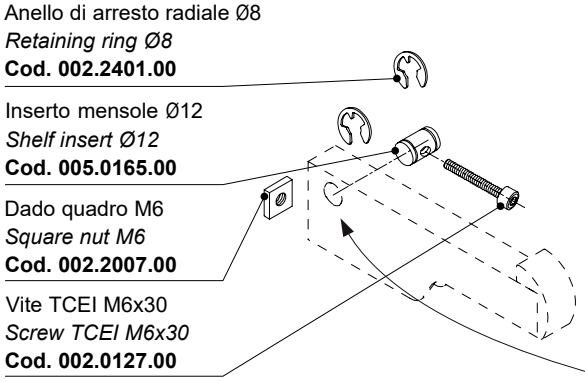

Kit minuteria fissaggio mensole 90°
90° shelf smallware fixing kit

Cod. 001.0591.00

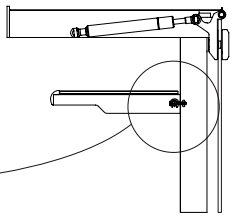

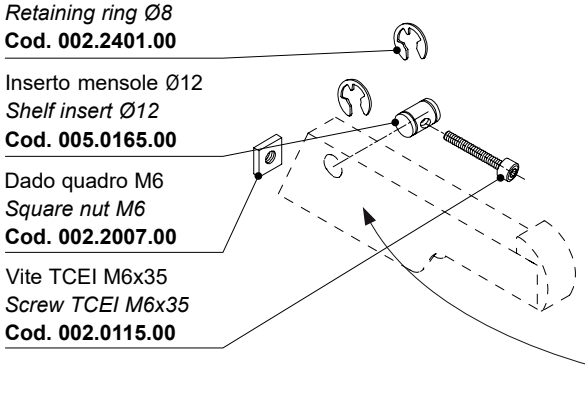

Kit minuteria fissaggio mensole inclinate
Sloped shelf smallware fixing kit

Cod. 001.0526.00

