LOGIK DOORS™



P93

+0 C°

P93 G

- Hinged door P93, gravity closing system
- Developed for positive temperatures +0c°
- Shockproof ABS profile , maximum thermal insulation
- Double glass 4+10+4+argon, tempered glass, low emission internal glass, glass spacer “warm edge”
- Front glass with 12mm serigraphy
- Door locking system at 90° for loading
- Adjustable door wings

Optional:

- Electric heating system 10w/m per frame
- Vertical upright kit per frame

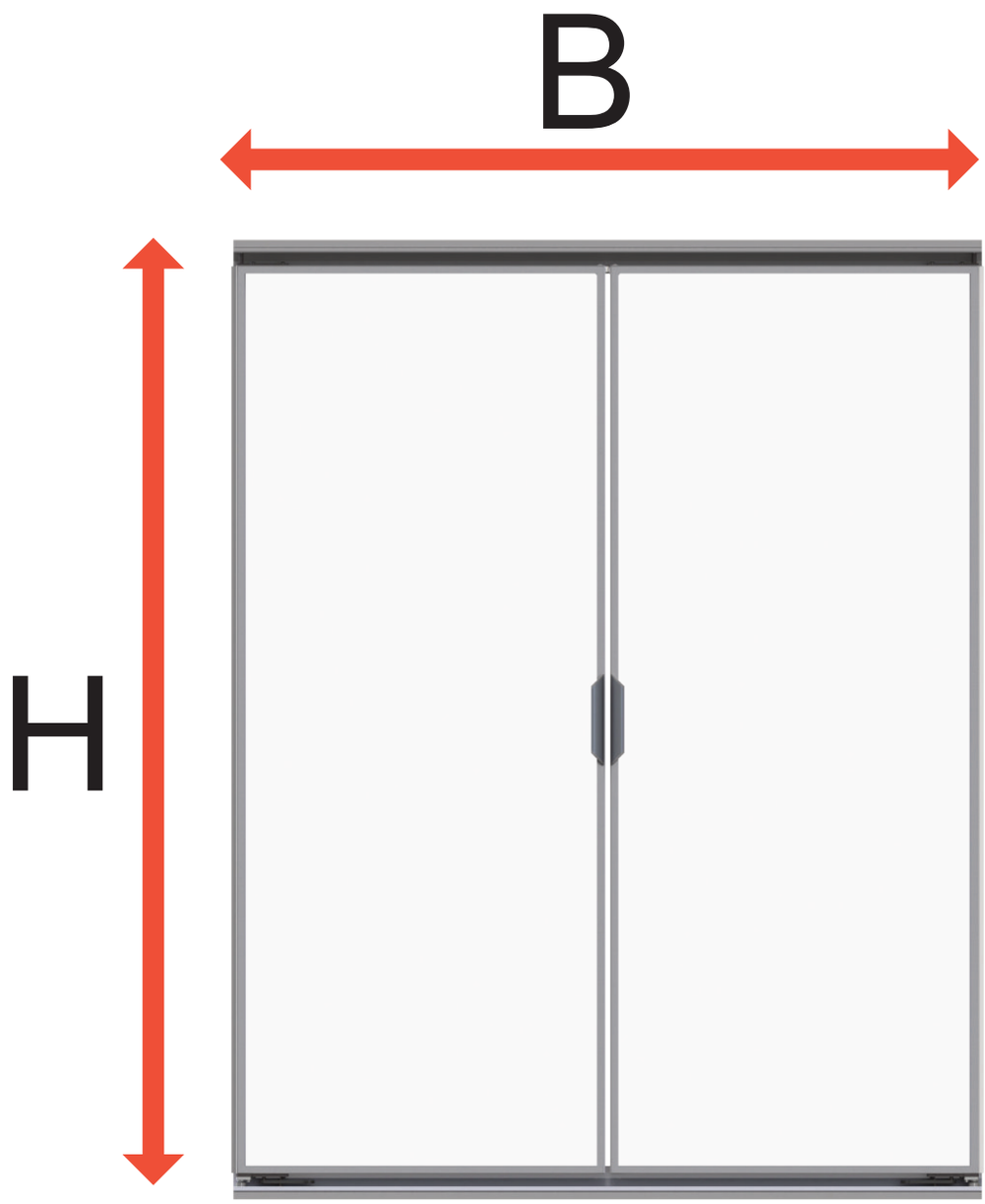

To request a quotation P93G please send:

- Base and height measure (BxH) of the housing on the cabinet
- Quantity
- Specify optionals required

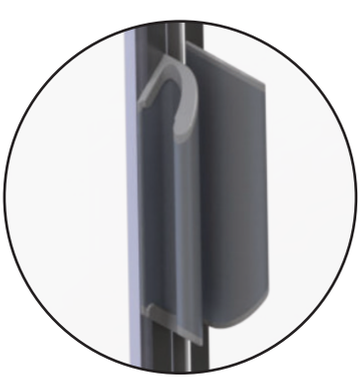
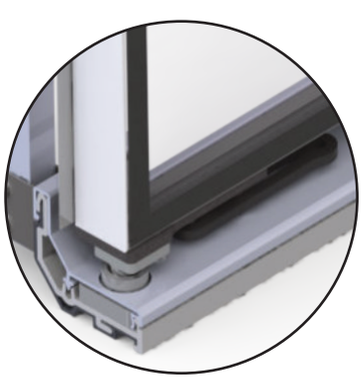
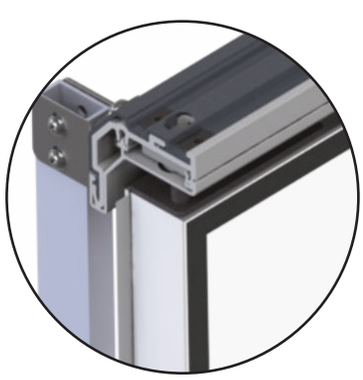
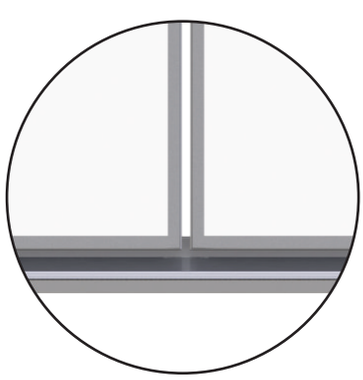



90° STOP

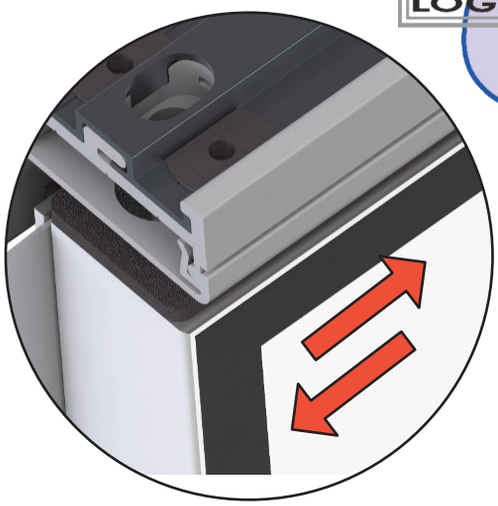

+/-5MM



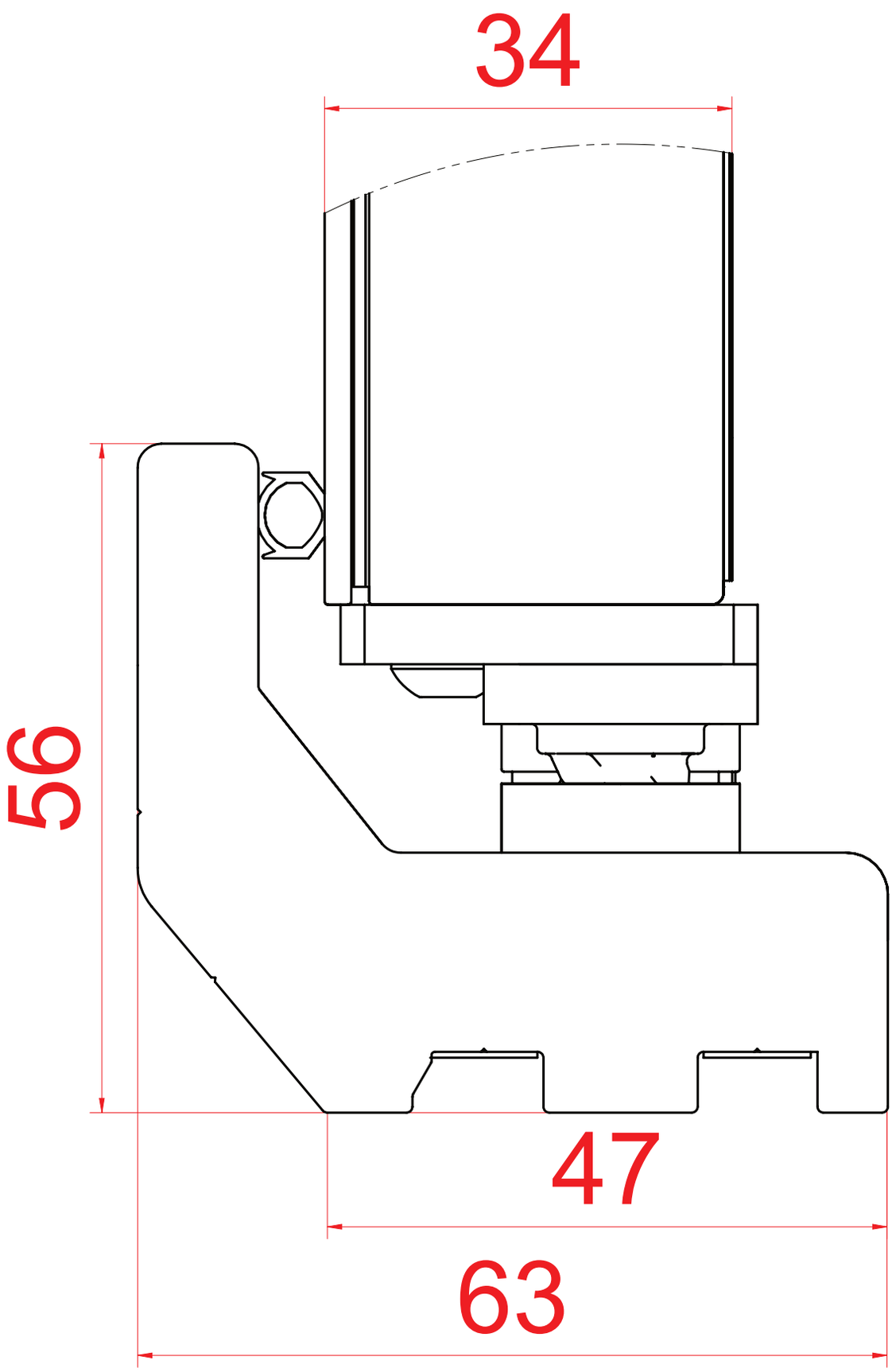
34
56
47
63

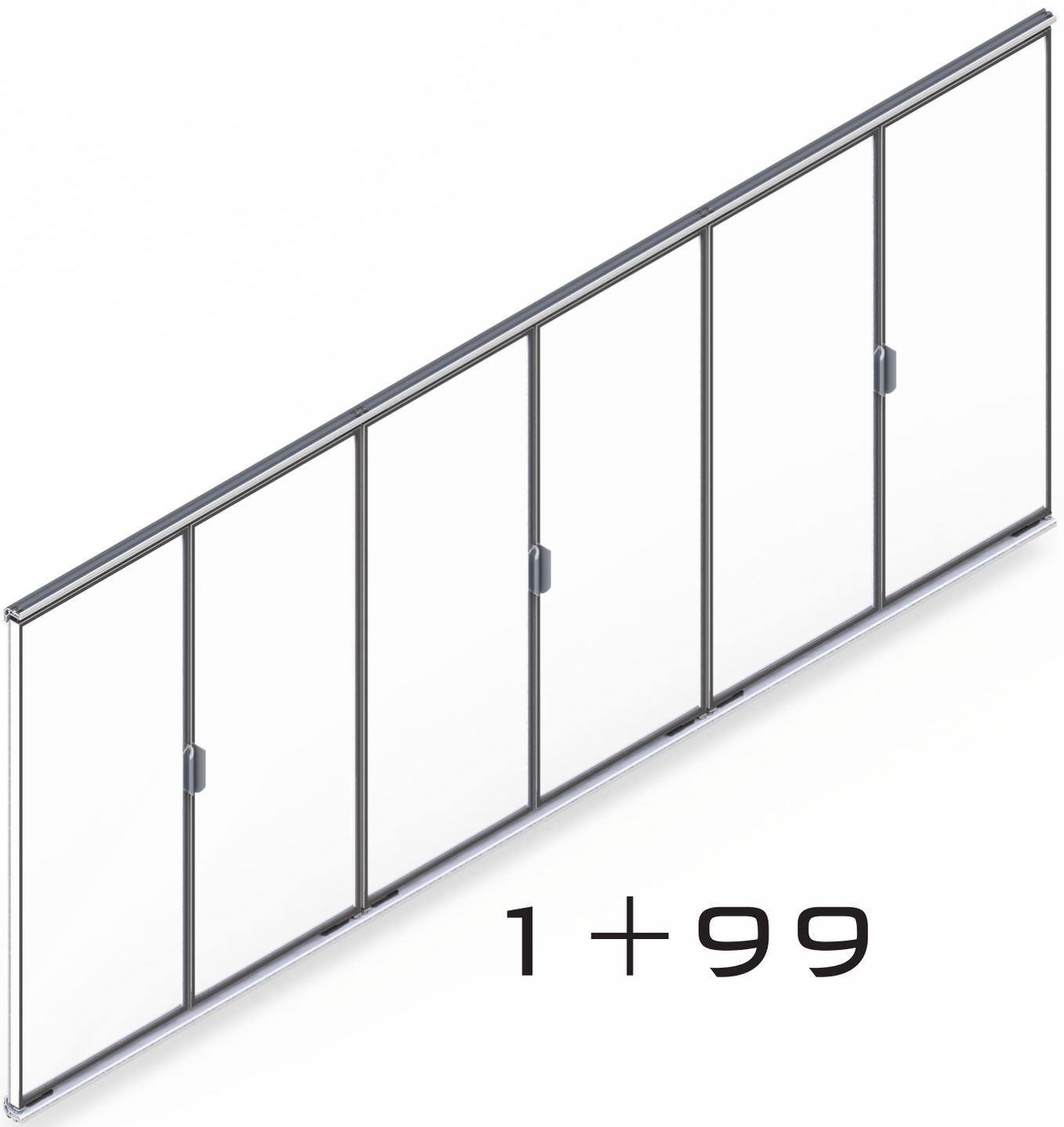

1+99

Lead time 6 working weeks from order confirmation.

Shipping in wooden cages, crates or containers.

Every supply is delivered with the necessary instruction for assembling and regulating.



P93G

LOGIK DOORS™

"LOGIK DOORS"™

INFO@LOGIKDOORS.COM

WWW.LOGIKDOORS.COM

A BRAND nem srl

VIA DEGLI ARTIGIANI, 9- ZI

34070 S. PIER D ISONZO (GO)

ITALY

TEL. +39 048170297

FAX +39 0481 70275